UTAH COUNTY
PUBLIC WORKS DEPARTMENT
2855 South State Street
Provo, Utah 84606
(801) 851-8600

INVITATION TO BID
for
ADMINISTRATION BUILDING
ROOF REPLACEMENT

Bid # 2016-13R

CLOSING DATE FOR RECEIPT OF BIDS:	Wednesday, August 17, 2016
TIME:	3:00 p.m.(Mountain Time) Bids will be opened at 3:30 p.m.
PLACE:	Office of the Utah County Purchasing Agent 100 East Center Street Room 3600 Provo, Utah 84606

TABLE OF CONTENTS

1. INVITATION TO BID 1
Intent 1
Procedure 1
Bid Organization 1
Questions and Clarifications 2
Acceptance of Bid 2
Disqualification of Bid 2
Disposition of Bids 2
Evaluation Criteria 2
General 2
Interpretation of ITB 3
Proprietary Information 3
Rules of Procurement 3

A. SPECIFICATIONS . . . . . Exhibit A
Required Experience A-1
Bonds A-1
Project Specifications A-1
Section 01 1000 SUMMARY
Section 06 1053 MISCELLANEOUS ROUGH CARPENTRY
Section 07 5419 POLYVINYL-CHLORIDE ROOFING (PVC)
Section 07 6210 GALVANIZED STEEL FLASHING AND TRIM
Section 07 9213 ELASTOMERIC JOINT SEALANTS
Project Drawings A101 and D101

CONTRACTOR'S COST PROPOSAL . . . . . Exhibit B

CONTRACTOR INFORMATION FORM . . . . . Attachment A
CERTIFICATE OF NON-COLLUSION . . . . . Attachment B
SAMPLE AGREEMENT . . . . . Attachment C

1. INVITATION TO BID

1.1 INTENT

Through this Invitation to Bid (ITB), Utah County intends to select a qualified contractor to furnish and install a new roof as specified on the Utah County Administration Building, located at 100 East Center Street, Provo, Utah.

The Contractor shall furnish all labor, materials, equipment, tools, transportation and supplies required to complete the work in accordance with the terms hereof.

Pursuant to this ITB an agreement will be executed, a copy of which is attached as Attachment C.

1.2 PROCEDURE

A. The procedure for response to this ITB, evaluation of bids, and selection of a Contractor is as follows:
   1. Interested entities will prepare and submit their bids prior to the specified Closing Date for Receipt of Bids.
   2. Utah County and/or its representatives will evaluate all submitted bids to determine acceptance or rejection of the bids.
   3. The selected bidder(s) will be required to sign an agreement, a sample of which is included as Attachment C.

1.3 BID ORGANIZATION

A. Each respondent must submit its SEALED bid to the Utah County Purchasing Agent. The envelope containing the bid must be clearly labeled "SEALED BID - ADMIN BUILDING ROOF, BID # 2016-13R". The bid must be delivered to

   Utah County Purchasing Agent
   100 East Center, Room 3600
   Provo, Utah 84606

   LATE BIDS WILL NOT BE ACCEPTED EXCEPT AS SET FORTH IN UTAH COUNTY PROCUREMENT RULES AND REGULATIONS.

B. The bid must include:
   1. Completed Contractor's Cost Proposal (Exhibit B)
   2. Completed Contractor Information Form (Attachment A).
   3. Completed Certificate of Non Collusion (Attachment B).
   4. A copy of the bidder's current local business license.
   5. A copy of the bidder's current Contractor License issued by the Utah Department of Commerce, Division of Occupational and Professional Licensing.
   6. Proof of required insurance.
   7. Documentation from the County Treasurer of the bidder's county showing that bidder is current on its personal property taxes.

1.4 QUESTIONS AND CLARIFICATIONS

Questions regarding this ITB should be directed prior to the submission deadline date to :
Brady Christensen, Division Manager - Buildings & Grounds
Business Hours:Mon-Fri 8:00 a.m. to 5:00 p.m. Mountain Time
Telephone Number: (801) 851-8600

1.5 ACCEPTANCE OF BID

A. Utah County reserves the right to reject any or all bids or waive minor irregularities when to do so would be in the best interests of Utah County. Minor irregularities are those which will not have a significant adverse effect on overall competition or performance levels.

B. The responding party agrees that Utah County may terminate this procurement procedure at any time, and Utah County shall have no liability or responsibility to the responding party for any costs or expenses incurred in connection with this ITB, or such party's response.

1.6 DISQUALIFICATION OF BID

The occurrence of any of the following may result in disqualification of a bid:

A. Failure to respond within the established timetable.
B. Failure to completely answer all questions presented in the ITB.
C. Use of any other type of form or format other than those indicated in the ITB.
D. Failure to provide requested documentation at the time of bid submission.
E Illegible responses.
F. If the bidder adds any provisions reserving the right to accept or reject an award or to enter into an agreement pursuant to an award, or any other unauthorized conditions, limitations or provisions.
G. If the bidder is unable to evidence a satisfactory record of integrity.
H. If the bidder is not qualified legally to contract.
I. If the bid at the opening does not contain a signed bid, and a signed certificate of non-collusion.
J. Utah County reserves the right to reject any or all bids.

1.7 DISPOSITION OF BIDS

All bids (and the information contained therein) shall become the property of Utah County. No bid shall be returned to the respondent regardless of the outcome of the selection process.

1.8 EVALUATION CRITERIA

All bids will be evaluated by authorized representatives of Utah County for compliance with the terms and conditions contained in this ITB and the resulting agreement awarded to the lowest responsive and responsible bidder.

1.9 GENERAL

A. Utah County will award a contract in reliance upon the information contained in bids submitted in response to the ITB. Utah County will be legally bound only when and if there is a signed agreement entered into between Utah County and the awarded bidder.

B. It is vitally important that any person who signs a bid or agreement on behalf of a respondent certifies that he or she has the authority to so act. The bidder who has its bid accepted may be required to answer further questions and provide further clarification of its bid and responses.

C. Receiving this ITB or responding to it does not entitle any entity to participate in services or transactions resulting from or arising in connection with this ITB. Utah County shall have no liability to any person or entity under or in connection with this ITB, unless and until Utah County and such person have executed and entered into an agreement pursuant to the terms of this ITB.

D. By responding to this ITB each responding party acknowledges that neither Utah County nor any of its representatives is making or has made any representation or warranty, either express or implied, as to the accuracy or completeness of any portion of the information contained in this ITB. The responding party further agrees that neither Utah County nor any of its representatives shall have any liability to the responding party or any of its representatives as a result of this ITB process or the use of the information contained in this ITB. Only the terms and conditions contained in an agreement when, as, and if executed, and subject to such limitations and restrictions as may be specified therein, may be relied upon by the respondent in any manner as having any legal effect whatsoever.

1.10 INTERPRETATION OF ITB

The invalidity of any portion of this ITB shall not prevent the remainder from being carried into effect. Whenever the context of any provision shall require it, the singular number shall be held to include the plural number, and vice versa, and the use of any gender shall include all genders. The paragraph and section headings in this ITB are for convenience only and do not constitute a part of the provisions hereof.

1.11 PROPRIETARY INFORMATION

The Contractor shall mark proprietary information contained in the bid which is not to be disclosed to the public or used for purposes other than the evaluation of the bids. Pricing and service elements of the successful bid will not be considered proprietary.

1.12 RULES OF PROCUREMENT

A. This procurement shall conform to and is governed by The Utah County Division of Purchasing, Procurement Rules and Regulations.

B. For this procurement, all bids must be submitted in the bid format outlined herein.

C. All prospective bidders must meet the required criteria as of the date of submission. Respondents must provide all information requested in the Contractor Information Form.

D. Utah County has established certain requirements with respect to bids to be submitted by respondents. The use of "shall", "must", or "will", in this ITB indicates a requirement or condition from which a material deviation will not be approved by Utah County.

EXHIBIT A

A. SPECIFICATIONS

A.1 REQUIRED EXPERIENCE

A. The Contractor must have a minimum of 3 years experience in the work specified herein. Proof of experience must be submitted with each bid.

B. Each bidder shall provide a list of at least 3 projects similar to this project, which are available for inspection by the County. The minimum information required may be supplied on the Contractor Information Form, however, bidders are encouraged to provide more detailed information, as they may see fit, with their bid submission.

C. The Contractor shall be the general contractor for the project and is required to have a Contractor License from the Utah Division of Occupational and Professional Licensing and a current local business license from the jurisdiction in which their business is located. A copy of the bidder's Contractor License and current local business license must be submitted with the bid.

A.2 BONDS

A. Before this contract is awarded by Utah County, the Contractor shall furnish to Utah County the following bonds:
   1. A performance bond satisfactory to County in an amount equal to 100% of the price specified in the contract, to assure the faithful performance of the contract, for the protection of Utah County, to be held until final acceptance by Utah County of all aspects of this project; and
   2. A payment bond satisfactory to the County in an amount equal to 100% of the price specified in the contract, for the protection of each person supplying labor, service, equipment, or material for the performance of the work provided for in the contract.

B. Each bond shall be:
   1. Biding upon the award of the contract;
   2. Executed by a surety company or companies duly authorized to do business in the State of Utah, or, in the form or cash or other certified funds.
   3. Payable to Utah County, A Body Corporate and Politic;
   4. Filed with the Utah County Public Works Department in a timely manner following the Closing date for Receipt of Bids.
   5. Increased if the contract price is increased by change order or otherwise subsequent to entering into the contract.

C. Utah County will hold the Payment Bond for 90 days subsequent to the completion of the project.

A.3 PROJECT SPECIFICATIONS

A. DIVISION 1 GENERAL REQUIREMENTS
   1. Section 01 1000 SUMMARY

B. DIVISION 4
   1. Section 06 1053 MISCELLANEOUS ROUGH CARPENTRY

C. DIVISION 7 THERMAL AND MOISTURE PROTECTION
   1. Section 07 5419 POLYVINYL-CHLORIDE ROOFING (PVC)
   2. Section 07 6210 GALVANIZED STEEL FLASHING AND TRIM
   3. Section 07 9213 ELASTOMERIC JOINT SEALANTS

D. Project Drawings A101 and D101

SECTION 01 1000

SUMMARY

PART 1 GENERAL

1.1 RELATED DOCUMENTS

A. Drawings and general provisions of the Contract, including General and Supplementary Conditions and other Division 1 Specification Sections, apply to this Section.

1.2 SUMMARY

A. This Section includes the following:
1. Work covered by the Contract Documents.
2. Type of the Contract.
3. Work phases.
4. Work under other contracts.
5. Use of premises.
6. Owner's occupancy requirements.
7. Work restrictions.
8. Specification formats and conventions.

B. Related Sections include the following:
1. Division 1 Section "Temporary Facilities and Controls" for limitations and procedures governing temporary use of Owner's facilities.

1.3 WORK COVERED BY CONTRACT DOCUMENTS

1. Project Identification: Utah County Regional Government Center

2. Project Location:
   a. 100 E Center Street Provo, Utah

A. Owner: Utah County
1. Owner's Representative: Brady Christensen

B. Consultant: JSR Services 95 E Fort Union Blvd, Midvale, UT

C. The Work consists of the following:
1. Areas indicated in Red
   a. Removal of insulation and membrane to deck.
   b. Installation of tapered insulation.
   c. Installation of one layer of 1.75” ISO.
   d. Installation of ½” hard board.
   e. Installation of mechanically attached 60 mil PVC membrane.
   f. Walk pads around all mechanical equipment and under sleepers.
   g. New flashings as designated on the drawings.
   h. Twenty year NDL warranty with 90 mph wind rider.
2. All other Areas
   a. Removal of membrane only.

b. Installation of one layer of 1.75” ISO.
c. Installation of ½” hard board.
d. Installation of mechanically attached 60 mil PVC membrane.
e. Walk pads around all mechanical equipment and under sleepers.
f. New flashings as designated on the drawings.
g. Twenty year NDL warranty with 90 mph wind rider.

1.4 TYPE OF CONTRACT

A. Project will be constructed under a single prime contract for each location.

B. Owner reserves the right to cancel the contract at any time
1. If the project has not mobilized according to the contractors submitted schedule; whether materials have or have not been ordered.
2. Non-performance.
3. Safety violations.
4. Security violations.

1.5 WORK PHASES

A. The contractor shall develop a schedule of the phasing of the project.
5. Schedule must be included with the bid proposal to include, but not limited to:
a. Sub-contractors if any.
b. Values in material and labor.
c. Work schedules.

1.6 USE OF PREMISES

A. General: Contractor shall have limited use of premises for construction operations as indicated on Drawings by the Contract limits.

B. Use of Site: Limit use of premises to work in areas within the Contract limits indicated. Do not disturb portions of Project site beyond areas in which the Work is indicated.
1. Owner Occupancy: Allow for Owner occupancy of Project site and use by the public.
2. Driveways and Entrances: Keep driveways, loading areas, and entrances serving premises clear and available to Owner, Owner's employees, and emergency vehicles at all times. Do not use these areas for parking or storage of materials.
a. Schedule deliveries to minimize use of driveways and entrances.
b. Schedule deliveries to minimize space and time requirements for storage of materials and equipment on-site.

C. Use of Existing Building: Maintain existing building in a weathertight condition throughout construction period. Repair damage caused by construction operations. Protect building and its occupants during construction period.

D. Safety requirements:
1. All application, material handling, and associated equipment shall conform to and be operated in conformance with OSHA safety requirements.
2. Comply with federal, state, local and Owner fire and safety requirements.
3. Advise Owner whenever work is expected to be hazardous to Owner, employees, and/or operators.

1.7 OWNER'S OCCUPANCY REQUIREMENTS

A. Full Owner Occupancy: Owner will occupy site and adjacent building during entire construction period. Cooperate with Owner during construction operations to minimize conflicts and facilitate Owner usage. Perform the Work so as not to interfere with Owner's day-to-day operations. Maintain existing exits, unless otherwise indicated.

B. Maintain access to existing walkways, corridors, and other adjacent occupied or used facilities. Do not close or obstruct walkways, corridors, or other occupied or used facilities without written permission from Owner and authorities having jurisdiction.

1. Provide not less than 48 hours' notice to Owner of activities that will affect Owner's operations.

1.8 INSURANCE REQUIREMENTS

A. Prior to performing any work, Contractor will obtain and maintain during the term of this agreement the following insurance:

1. Workman's Compensation Insurance.
2. Employers Liability Insurance with minimum limits of the greater of $100,000 E. L. each accident, $100,000 E.L. disease-each employee, $500,000 E.L. disease-policy limit or as required by law.
3. Commercial General Liability Insurance – ISO Form CG 00 01 (12/09) or equivalent Occurrence policy which will provide primary coverage to the additional insured (the Owner) in the event of any Occurrence, Claim or Suit with:
   a. Limits of the greater of:
      i. $2,300,000 General Aggregate:
      ii. $2,300,000 Products – Comp/Ops Aggregate:
      iii. $2,300,000 Personal and Advertising Liability:
      iv. $2,300,000 Each Occurrence:
   b. Endorsements attached to the General Liability policy including the following or their equivalent: ISO Form CG 20 10(-7/04). Additional Insured – Owners, Lessees, Or Contractors (Form B), naming Owner as additional insured.
4. Automobile Liability Insurance with:
   a. Combined Single Limit each accident in the amount of $500,000 or the Contractors actual coverage whichever is greater.

1.9 WORK RESTRICTIONS

A. On-Site Work Hours:

Weekdays: After 7 AM
Week nights: Any time
Saturdays: Any time
Sundays: Any time
Holidays: Any time

1.10 SPECIFICATION FORMATS AND CONVENTIONS

A. Specification Format: The Specifications are organized into Divisions and Sections using CSI/CSC's "MasterFormat" numbering system.

1. Section Identification: The Specifications use Section numbers and titles to help cross-referencing in the Contract Documents. Sections in the Project Manual are in numeric sequence; however, the sequence is incomplete because all available Section numbers

are not used. Consult the table of contents at the beginning of the Project Manual to determine numbers and names of Sections in the Contract Documents.

2. Division 1: Sections in Division 1 govern the execution of the Work of all Sections in the Specifications.

B. Specification Content: The Specifications use certain conventions for the style of language and the intended meaning of certain terms, words, and phrases when used in particular situations. These conventions are as follows:

1. Abbreviated Language: Language used in the Specifications and other Contract Documents is abbreviated. Words and meanings shall be interpreted as appropriate. Words implied, but not stated, shall be inferred as the sense requires. Singular words shall be interpreted as plural, and plural words shall be interpreted as singular where applicable as the context of the Contract Documents indicates.
2. Imperative mood and streamlined language are generally used in the Specifications. Requirements expressed in the imperative mood are to be performed by Contractor. Occasionally, the indicative or subjunctive mood may be used in the Section Text for clarity to describe responsibilities that must be fulfilled indirectly by Contractor or by others when so noted.
   a. The words "shall," "shall be," or "shall comply with," depending on the context, are implied where a colon (:) is used within a sentence or phrase.

PART 2 PRODUCTS (Not Used)

PART 3 EXECUTION (Not Used)

END OF SECTION

SECTION 06 1053

MISCELLANEOUS ROUGH CARPENTRY

PART 1 - GENERAL

1.1 SUMMARY

A. Section Includes:

1. Framing with dimension lumber.
2. Rooftop equipment bases and support curbs.
3. Wood blocking and nailers.
4. Wood sleepers.

1.2 INFORMATIONAL SUBMITTALS

A. Evaluation Reports: For the following, from ICC-ES:

1. Preservative-treated wood.
2. Fire-retardant-treated wood.
3. Power-driven fasteners.

PART 2 - PRODUCTS

2.1 WOOD PRODUCTS, GENERAL

A. Lumber: DOC PS 20 and applicable rules of grading agencies indicated. If no grading agency is indicated, provide lumber that complies with the applicable rules of any rules-writing agency certified by the ALSC Board of Review. Provide lumber graded by an agency certified by the ALSC Board of Review to inspect and grade lumber under the rules indicated.

1. Factory mark each piece of lumber with grade stamp of grading agency.
2. Provide dressed lumber, S4S, unless otherwise indicated.

2.2 WOOD-PRESERVATIVE-TREATED MATERIALS

A. Preservative Treatment by Pressure Process: AWPA U1; Use Category UC2.

1. Preservative Chemicals: Acceptable to authorities having jurisdiction and containing no arsenic or chromium.

B. Kiln-dry lumber after treatment to a maximum moisture content of 19 percent. Do not use material that is warped or does not comply with requirements for untreated material.

C. Mark lumber with treatment quality mark of an inspection agency approved by the ALSC Board of Review.

D. Application: Treat items indicated on Drawings, and the following:

1. Wood cants, nailers, curbs, equipment support bases, blocking, stripping, and similar members in connection with roofing, flashing, vapor barriers, and waterproofing.
2. Wood sills, sleepers, blocking, and similar concealed members in contact with masonry or concrete.

2.3 MISCELLANEOUS LUMBER

A. General: Provide miscellaneous lumber indicated and lumber for support or attachment of other construction, including the following:

1. Blocking.
2. Nailers.
3. Rooftop equipment bases and support curbs.

B. For items of dimension lumber size, provide Construction or No. 2 grade lumber of any species.

2.4 FASTENERS

A. General: Provide fasteners of size and type indicated that comply with requirements specified in this article for material and manufacture.

1. Where carpentry is exposed to weather, in ground contact, pressure-preservative treated, or in area of high relative humidity, provide fasteners with hot-dip zinc coating complying with ASTM A 153/A 153M.

B. Power-Driven Fasteners: NES NER-272.

PART 3 - EXECUTION

3.1 INSTALLATION, GENERAL

A. Set carpentry to required levels and lines, with members plumb, true to line, cut, and fitted. Fit carpentry to other construction; scribe and cope as needed for accurate fit.

B. Where wood-preservative-treated lumber is installed adjacent to metal decking, install continuous flexible flashing separator between wood and metal decking.

C. Framing Standard: Comply with AF&PA's WCD 1, "Details for Conventional Wood Frame Construction," unless otherwise indicated.

D. Install plywood backing panels by fastening to studs; coordinate locations with utilities requiring backing panels.

E. Do not splice structural members between supports unless otherwise indicated.

F. Comply with AWPA M4 for applying field treatment to cut surfaces of preservative-treated lumber.

G. Securely attach carpentry work to substrate by anchoring and fastening as indicated, complying with the following:

1. NES NER-272 for power-driven fasteners.
2. Table R602.3(1), "Fastener Schedule for Structural Members," and Table R602.3(2), "Alternate Attachments," in ICC's International Residential Code for One- and Two-Family Dwellings.

3.2 PROTECTION

A. Protect wood that has been treated with inorganic boron (SBX) from weather. If, despite protection, inorganic boron-treated wood becomes wet, apply EPA-registered borate treatment. Apply borate solution by spraying to comply with EPA-registered label.

END OF SECTION

SECTION 07 5419

POLYVINYL-CHLORIDE ROOFING (PVC)

PART 1 - GENERAL

1.1 SUMMARY

A. Includes But Not Limited to:
   1. Install roofing “mechanically attached” membrane with flashings and other components to comprise total roofing system as described in Contract Documents.

B. Products Installed But Not Furnished Under This Section:
   1. Sheet metal work including caps, sleeves, umbrella hoods, pipe enclosure boxes, strapping, and scuppers.

C. Related Requirements:
   1. Section 07 6210: Galvanized Steel Flashing and Trim.

1.2 REFERENCES

A. Association Publications:
   1. American National Standards Institute / American Society of Heating, Refrigerating, & Air-Conditioning Engineers / Illuminating Engineering Society:
      a. ANSI/ASHRAE/IESNA Standard 90.1 (2010): Energy Standard for Buildings Except Low-Rise Residential Buildings'.
   2. American National Standards Institute / Single Ply Roofing Industry:
      a. ANSI/SPRI WD-1 'Wind Design Standard for Roofing Assemblies'.
   3. FM Global Resource Catalogue by FM Global, Norwood, MA www.fmglobal.com.
      a. Approval Guide:
         1) Factory Mutual Standard 4470 - Approval Standard for Class 1 Roof Covers.
      b. Property Loss Prevention Data Sheet 1-28, ‘Wind Design’ (latest edition).
      c. Property Loss Prevention Data Sheet 1-29, ‘Roof Deck Securement and Above-Deck Components’ (latest edition).
      d. Property Loss Prevention Data Sheet 1-49, ‘Perimeter Flashing’ (latest edition).
   4. National Roofing Contractors Association (NRCA) - Low Slope Roofing and Waterproofing Manual, Current Edition.
   5. Technical Manuals by Sheet Metal and Air Conditioning Contractors National Association Inc (SMACNA) Washington D.C. www.smacna.org.
   6. Underwriters Laboratories (UL):
      a. TGFU R1306 - 'Roofing Systems and Materials Guide', (Current Edition).

B. Definitions:
   1. Adhere: The clinging of one surface to another; either molecularly or otherwise.
   2. Cap Flashing: Material used to cover top edge of base flashings or other flashings.
   3. Deck: Structural component of roof of building which provides substrate to which roofing system is applied.
   4. Drain: Device used to carry water off of a roof.
   5. Flame Spread Classification: Categories as per ASTM E84/UL 723 or CAN/ULC-S102-10:
      a. Class A: Highest fire-resistance rating for roofing as per ASTM E108. Indicated roofing is able to withstand severe exposure to fire exposure to fire originating from sources outside building.
      b. Class B: Fire-resistance rating indicating roofing materials are able to withstand moderate exposure to fire originating from sources outside of building.
      c. Class C: Fire-resistance rating indicating roofing materials are able to withstand light exposure to fire originating from sources outside of building.

6. Flashing: Components used to seal roof system at areas where roof covering is interrupted or terminated. For example, pipes, curbs, walls, etc. all have special components that, when correctly installed, will help prevent moisture entry into roof system or building.
7. Heat Welding: Fusing seams of separate sections of roofing material together through use of hot air or an open flame and pressure. Also known as heat seaming.
8. Insulation: Any of a variety of materials designed to reduce flow of heat, either from, or into, a building.
9. Lap: Part of roofing material that overlaps section of adjacent material.
10. Mechanical Fasteners: Devices such as screws, plates, battens, nails, or other materials that are used to secure roofing materials.
11. Membrane: Portion of roofing system that serves as waterproofing material. Can be composed of one material or several materials laminated together.
12. Metal Flashing: Roof components made from sheet metal that are used to terminate roofing membrane or material along roof edges. Metal flashings are also used in the field of roof around penetrations.
13. Mil: Unit of measure equal to 0.001 inches (1/1000 in.) used to indicate thickness of roofing membrane.
14. Polyvinyl Chloride (PVC): Thermoplastic polymer that can be compounded into flexible and rigid forms through use of plasticizers, stabilizers, fillers, and other modifiers; rigid forms are used in pipes; flexible forms are used in manufacture of sheeting and roof membrane materials.
15. Reinforced Membrane: Roofing membrane that has been strengthened by adding polyester scrims or mats, glass fibers or other material.
16. Roof Assembly: System of interacting roof components (including roof deck) designed to weatherproof, and normally, to insulate building's top surface.
17. Scrim: Woven or nonwoven material used to reinforce membranes; it is usually laminated or coated to produce membrane.
18. Self-Adhering Membrane: Type of membrane whose bottom surface will stick or adhere to substrate without use of additional adhesive material.
19. Single-Ply Membranes: Roofing membranes that are applied in one layer. Thermoplastic and thermoset membranes are usually Single-Ply Membranes. Single-Ply membranes come in five basic types: (1) Ballasted, (2) Fully-Adhered, (3) Mechanically-Fastened, (4) Partially-Adhered, and (5) Self-Adhered. Seams of Single-Ply Membranes can be heat welded, solvent welded, and adhered using seam tape or other adhesives.
20. Termination: Sealed edges of roof membrane.
21. Termination Bar: Bar, usually metal or vinyl, used to seal and anchor free edges of roof membrane.
22. Thermoplastic: (1) adjective - Becoming soft when heated and hard when cooled. (2) noun - Thermoplastic resin, such as polystyrene or polyethylene.
23. Weld: Join multiple metal or PVC components together by heat fusion.
24. Wind Uplift: Wind-induced forces on roof system or components in roof system. Wind uplift generally includes negative pressure component caused by wind being deflected around and across surfaces of building and positive pressure component from air flow beneath roof deck.

C. Reference Standards:
1. ASTM International:
   a. ASTM C1289-12e, 'Standard Specification for Faced Rigid Cellular Polyisocyanurate Thermal Insulation Board.'
   b. ASTM D4434/D4434M-12, 'Standard Specification for Polyvinyl Chloride Sheet Roofing'.
   c. ASTM E108-11, 'Standard Test Methods for Fire Tests of Roof Coverings'.
   d. ASTM E1918-06, 'Standard Test Method for Measuring Solar Reflectance of Horizontal and Low-Sloped Surfaces in the Field'.
2. International Building Code (IBC):
   a. Chapter 15, 'Roof Assemblies And Rooftop Structures':
      1) Section 1507, 'Requirements for Roof Coverings':
         a) 1507.13, 'Thermoplastic Single-ply Roofing'.
3. Underwriters Laboratories (UL):
   a. UL 580: 'Tests for Uplift Resistance of Roof Assemblies' (5th Edition).
   b. UL 723, 'Tests for Safety Test for Surface Burning Characteristics of Building Materials' (10th Edition).
   c. UL 790, 'Standard Test Methods for Fire Tests of Roof Coverings' (8th Edition).

1.3 ADMINISTRATIVE REQUIREMENTS

A. Pre-Installation Conference: Roofing Manufacturer and Roofing installer's foreman and those responsible for installation of roofing to be in attendance.

B. Schedule conference after installation of roof decking but before application of roofing system.
   1. Review Manufacturer's written instructions.
   2. Review delivery, storage, and handling requirements.
   3. Review ambient conditions requirements.
   4. Review roofing installation requirements including flashing and penetrations.
   5. Review temporary protections for roofing system.
   6. Review cleaning and disposal requirements.
   7. Review Special Procedure Submittal for Warranty Information to be given to Manufacturer before Manufacture will issue Roof Warranty by Installer.
   8. Review safety issues.
   9. Review field inspections and non-conforming work requirements.

1.4 SUBMITTALS

A. Action Submittals;
   1. Product Data:
      a. Roofing Manufacturer's literature or cut sheet for each element of system.
      b. Manufacturer's preparation and installation instructions and recommendations.
   2. Shop Drawings:
      a. Prepared by Roofing Installer and approved by Roofing Membrane Manufacturer and include following:
         1) Base flashings.
         2) Location and type of penetrations.
         3) Membrane terminations.
         4) Outline of roof and roof size.
         5) Perimeter and penetration details.
         6) Roof insulation:
            a) Insulation fastening patterns for corner, perimeter, and field-of-roof locations.
         7) Special details and materials.
      b. Confirm that specified FM Class and UL Class assembly is appropriate for Project location.
      c. Include approved copy of Manufacturers Notice of Award.

B. Informational Submittals::
   1. Certificates:
      a. Installer's signed certificate stating roofing system complies with Contract Documents performance requirements and work only performed by trained and authorized personnel in those procedures.
      b. Manufacture's signed certificate that roof system has been inspected by Technical Service Representative and stating no deviation from system specified or approved shop drawings without written approval by Owner Representative and Manufacture.
   2. Test And Evaluation Reports: Submit evidence that roof system has been tested and approved or listed as follows:
      a. FM Class 1-90.
      b. UL Class A assembly.
   3. Manufacturer Instructions:
      a. Two copies of Roofing Manufacturer's published instructions for Consultant and maintain one at job-site.
   4. Special Procedure Submittals:
      a. Installer to fill out Attachment for Warranty Information to be given to Manufacturer before Manufacture will issue Roof Warranty.
   5. Qualification Statements:
      a. Roofing Manufacturer's certification of Installer.

C. Closeout Submittals:
   1. Warranty Documentation:
      a. Final, executed copy of Warranty.
   2. Record Documentation:
      a. Manufacturers documentation:
         1) Record Shop Drawings if requested. Record shop drawings shall be given shop drawing number by Roofing Manufacturer.

1.5 QUALITY ASSURANCE

A. Regulatory Agency Sustainability Requirements:
   1. As specified in Design Criteria requirements in Part 2 of this specification.

B. Qualifications:
   1. Provide documentation if requested by Consultant:
      a. Roofing Installer shall be approved and authorized by Roofing System Manufacturer to install Manufacturer's product and eligible to receive Manufacturer's special warranty before bid.
      b. Roofing Installer shall be able to document roofing membrane installation for five (5) year minimum.
      c. Roofing Installer must have current license for the city, county, and state where project is located.
      d. Roofing Installer must have license for specific type of roofing work to be preformed.
      e. Roofing Installer's foreman shall be skilled in his trade and qualified to lay out and supervise the Work.
      f. Membrane and flashing installation shall be performed by personnel trained and authorized by Roofing Manufacturer.
      g. Welding equipment shall be provided by or approved by Roofing Manufacturer. Mechanics intending to use equipment shall have successfully completed training course provided by Manufacturer's Technical Representative before welding.
   2. Manufacturer Qualifications:
      a. Manufacturer shall manufacture membrane material for five (5) consecutive years. (Manufacturing is defined as owning the means of production, controlling, and monitoring the daily production of membrane).
         1) No product with documented failure will be allowed.
      b. Manufacturer that is UL listed for membrane roofing system used for this Project.
      c. Source Limitations:
         1) Provide roof components including roof insulation and fasteners for roofing system from same Manufacturer as membrane roofing or approved by Roofing Membrane Manufacturer.
      d. Inspections by Manufacturer
         1) Manufacturer shall provide a technical representative on site for the pre-installation conference, the first day of startup and at least two site visits during construction.
         2) Manufacturer shall provide written report of observations to consultant within 48 hours of any site visits.

1.6 DELIVERY, STORAGE, AND HANDLING

A. Delivery And Acceptance Requirements:
   1. Deliver products job site in original unopened containers or wrappings bearing all seals and approvals.
   2. Make no deliveries to Project until installation is about to commence, or until approved storage area is provided.
   3. Deliver products job site in original unopened containers or wrappings bearing all seals and approvals.
   4. Deliver materials in sufficient quantities to allow continuity of work.
   5. Remove any material not approved from job site.

B. Storage And Handling Requirements:
1. Storage Requirements:
a. General:
1) Follow Manufacturer's instructions and precautions for storage of materials.
2) Handle and store roofing materials and place equipment in a manner to avoid permanent deflection of roof decking.
b. Protection:
1) Protect roof materials from physical damage, moisture, soiling, and other sources in a clean, dry, protected location and with temperature range required by Manufacturer. Protect from direct sunlight.
2) Provide continuous protection of materials against moisture absorption (Manufacturer's/Supplier's shrink wrap is not accepted waterproofing).
3) Store membrane rolls lying down on pallets fully protected from weather with clean canvas tarpaulins.
c. Roof Insulation:
1) Comply with insulation Manufacturer's written instructions for handling, storing, and protection during installation.
d. Safety:
1) Store flammable materials in cool, dry area away from sparks, open flames, or excessive heat. Follow precautions outlined on containers or supplied by material manufacturer/supplier.
2) Liquid materials such as solvents and adhesives shall be stored off site and installed away from open flames, sparks, and excessive heat.
3) Site storage is acceptable if liquid materials are placed in a locked, sealed storage container.
4) Situate equipment and materials so as to preclude danger, disturbance, or interference to public safety and traffic, and to not constitute fire hazard.
e. Temperature:
1) Store adhesives at temperatures above 40 deg F (4 deg C).and below 180 deg F (82 deg C).
f. Unacceptable Material:
1) Remove all wet and damaged materials from site.
2) Remove from job site materials that are determined to be damaged by Consultant or by Roofing Manufacturer and replace at no additional cost to Owner.
3) Discard and legally dispose of liquid material that cannot be applied within its stated shelf life.
2. Handling Requirements:
a. Select and Handle operating equipment so as not to damage existing construction or new roofing system, or to overload structural system.
b. Handle rolled goods so as to prevent damage to edge or ends.

1.7 FIELD CONDITIONS

A. Ambient Conditions:
1. Temperature ranges shall be within tolerances allowed for material being used.
a. Cold temperature:
1) Follow Manufacturer's instructions for cold temperature installation. Follow specified precautions. Expose only enough adhesive to be used as directed by membrane manufacturer.
2) Roof surface shall be free of ponding water, ice, and snow.
b. Hot temperature:
1) Do not expose membrane and accessories to constant temperature in excess of 180 deg F (82 deg C).
2) Roof surface shall be free of ponding water,
2. Proceed with roofing work when existing and forecasted weather conditions permit.

1.8 WARRANTY

A. Manufacturer Warranty:
   1. Roofing Membrane Manufacturer's Special Warranty for (NDL) 20 year material and labor covering roofing system, including insulation, components of membrane roofing system,
   2. Warranty shall include wind speed coverage from 0 mph to 90 mph.

PART 2 - PRODUCTS

2.1 SYSTEM

A. Manufacturer:
   1. Carlisle SynTec Incorporated, Carlisle PA www.carlisle-syntec.com.
      a. Sure-flex
   2. Sika Sarnafil, Canton, MA www.sikacorp.com.
      a. Sikaplan
   3. Mulehide Products Co, Beloit, WI www.mulehide.com
      a. Mule-hide PVC Membrane.

B. Criteria:
   1. General:
      a. Installed membrane roofing and base flashings shall withstand specified uplift pressures, thermally induced movement, and exposure to weather without failure due to defective manufacture, fabrication, installation, or other defects in construction.
      b. Membrane roofing and base flashings shall remain watertight.
   2. Regulatory Requirements:
      a. Building Codes:
         1) Roof system will meet requirements of all federal, state, and local codes having jurisdiction.
         2) Factory Mutual Research Corporation (FM):
            a) Class 1-90.
         3) Underwriters Laboratories (UL):
            a) UL Class B assembly.
   3. Fire Characteristics Performance Requirement:
      a. Roof system will achieve UL Class B rating when tested in accordance with ASTM E108 or UL-790.
         1) Materials shall be identified with appropriate markings of applicable testing agency.
      b. Wind Uplift Performance Requirement:
         1) Roof system designed to achieve a FM 1-90 wind uplift rating.
         2) Perimeter wood blocking, insulation, and sheet metal installation shall, as minimum, be in accordance with recommendations of Factory Mutual Loss Prevention for:
            a) Data Sheet 1-28, 'Wind Design.'
            b) Data Sheet 1-29, 'Roof Deck Securement and Above Deck Components'.
         3) Meet designed wind speed for Project.
   4. Material Compatibility:
      a. Provide roofing materials that are compatible with one another under conditions of service and application required, as demonstrated by membrane Roofing Membrane Manufacturer based on testing and field experience.
   5. Metal details, fabrication practices, and installation methods shall conform to applicable requirements of following:
      a. Factory Mutual Loss Prevention Data Sheet 1-49, 'Perimeter Flashing' (latest issue).
      b. Sheet Metal and Air Conditioning Contractors National Association Inc, 5th edition.

C. Materials:
   1. Description:
      a. Adhered:
         1) Meet requirements of ASTM D4434, Type III.

b. Surface Color:
1) White.

2. Membrane:
a. Thickness: 0.60 mil thick by optimum width and length determined by job conditions.

D. Insulation:
1. FM or UL approved.
a. Polyisocyanurate Foam Insulation Board:
1) Meet requirements of ASTM C1289.
2) Insulation boards shall be Factory Mutual Class 1-90 approved.
3) Insulation panels directly metal deck shall be 1.75 inches by 48 inches by 96 inches.
4) Tapered layer shall slope at 1/4 in per ft.
b. Cover Board Over Insulation:
1) 1/4 inch thick minimum Dens-Deck Prime Roof Board by G-P Gypsum.
2) 1/4 inch thick minimum Securock glass fiber by USG.

2.2 ACCESSORIES

A. Adhesives:
1. Supplied by Roofing Membrane Manufacturer to meet uplift and VOC requirements.
a. Membrane:
1) Water based membrane adhesive.
b. Insulation:
1) Manufactures standard low rise polyurethane adhesive.

B. Auxiliary Materials:
1. Furnish and install all auxiliary materials as recommended by Roofing Membrane Manufacturer for intended use and compatible with membrane roofing materials and specified warranty.

C. Flashing:
1. Polyvinyl-chloride, 0.060 inch (1.52 mm) thick, of same color as sheet membrane.
2. Preformed Pipe Sleeves – Factory prefabricated, 0.060 inch (1.52 mm) thick.
3. Preformed Inside and Outside sheet flashings.

D. Mechanical Attachment Accessories:
1. Fasteners:
a. Fasteners or engineered fasteners designed to anchor membrane and flashing into substrates that include steel, concrete, gypsum, and light weight concrete roof decks.
b. Bars and plates engineered as companion assembly. Used to secure membrane and/or flashing as required by Membrane Manufacturer.
2. Rhinobond Plates:
a. Plates engineered as companion assembly with fasteners.
1) Used to secure insulation, hardboard, and membrane as required by Membrane Manufacturer.

E. Miscellaneous Fasteners and Anchors:
1. Fasteners, anchors, nails, straps, bars, etc. shall be of post-galvanized zinc or cadmium-plated steel, aluminum, or stainless steel. Mixing metal types and methods of contact shall be in such manner as to avoid galvanic corrosion.
2. Compatible with substrates and flashings to be anchored:
a. Fasteners for attachment of metal to masonry shall be expansion type fasteners with stainless steel pins.
b. Concrete fasteners and anchors shall have minimum embedment of 1-1/4 inch (32 mm) and shall be approved for such use by Fastener Manufacturer.
c. Wood fasteners and anchors shall have embedment of one inch (25 mm) minimum and be approved for such use by Fastener Manufacturer.

F. Nite Seal:

1. Compatible with materials with which it is used.
2. Furnished by Roofing Membrane Manufacturer.

G. Pourable Sealer:
1. Approved by Roofing Membrane Manufacturer for specified roof system.

H. Surface Cleaner/ Primer:
1. Approved by Roofing Membrane Manufacturer for specified roof system.

I. Termination Bars:
1. Flat extruded aluminum bar with spaced holes for termination attachment furnished by Membrane Manufacture.
2. Extruded aluminum bar with sealant track with spaced holes for termination attachment furnished by Roofing Membrane Manufacturer.

J. Termination Bar Fasteners:
1. Threaded fasteners with expansion sleeve that provide easy future removal and reuse, furnished by Roofing Membrane Manufacturer.

K. Walk Pads:
1. Manufacturers standard heat weldable with diamond plate tread pattern and trimmed in safety yellow.

L. Water Cut Off Mastic:
1. Approved by Roofing Membrane Manufacturer for specified roof system.

M. Coated metal: 0.023 inch (0.56 mm) thick G90 galvanized sheet metal laminated with 0.020 inch (0.51 mm) thick membrane.

PART 3 - EXECUTION

3.1 EXAMINATION

A. Verification Of Conditions:
1. Inspect for defects such as excessive surface roughness, contamination, structural inadequacy, or any other condition that will adversely affect quality of work.
2. Verify that roof drain lines are functioning correctly before starting work of this Section. Report such blockages in writing to Owner's representative, with copy to Roofing Manufacturer, for corrective action before beginning work of this Section.
3. Stop work immediately if any unusual or concealed condition is discovered and immediately notify Owner in writing, with letter copy to Roofing Manufacturer.

3.2 PREPARATION

A. Surface Preparation:
1. Surfaces to receive new materials shall be clean, smooth, dry (free of moisture), free of flaws, sharp edges, loose and foreign material, dirt, oil and grease.
   a. Mechanically scrape exposed surfaces, if necessary to remove projections.
   b. Roofing shall not start until defects have been corrected.
   c. Removal of all loose gravel, dirt and dust in preparation of installation of roofing system.
   d. Removal and replacement of all wet insulation as shown on demolition plan.
2. Verify that surfaces receiving new materials have no defects or errors which would result in poor application or cause latent defects in workmanship.
3. Inspect anchoring of wood members for conformance to specified requirements. Upgrade nonconforming fasteners to meet specified requirements.
4. Reset or replace fasteners that are loose, deformed, damaged, or corroded.

5. Fit joints of insulation tightly together.
6. Prevent interior leakage, materials falling into interior, and other such Occurrences.
7. Install temporary water cut-offs at completion of each days work and completely remove upon resumption of work.
   a. Waterstops shall not emit dangerous or unsafe fumes and shall not remain in contact with finished roof as installation progresses.
   b. Replace contaminated membrane at no additional cost to Owner.
8. Provide temporary walkways and work platforms as necessary to complete work under this section with no damage to existing surfaces exposed during work, and to new materials applied.
9. Coordinate application of membrane to provide protection of underlying materials from wetting or other damage by the elements on a continuous basis.
10. Sheet metal sleeves, caps, and enclosures shall be completely installed on a daily basis.
11. Prevent materials from entering and clogging roof drains and conductors and from spilling or migrating onto surfaces of other construction. Remove roof-drain plugs when no work is taking place or when rain is forecast.
12. Complete terminations and base flashings and provide temporary seals to prevent water from entering completed sections of roofing system at the end of the workday or when rain is forecast.
13. Remove and discard temporary seals before beginning work on adjoining roofing..

B. Nailers:
1. Install continuous treated wood nailers at perimeter of entire roof and around roof projections and penetrations as described on Project Drawings. Replace existing wood nailers shown to remain, if they contain rot or are otherwise damaged.
   a. Anchor nailers to resist minimum force of 300 lbs (136 kg) per lineal foot (300 mm) in any direction. Provide 1/2 inch (13 mm) space between nailer lengths. Individual nailer lengths shall not be less than 36 inches (900 mm) long. Nailer fastener spacing shall be at 12 inches (300 mm) on center, or 16 inches (400 mm) if necessary to match structural framing. Stagger fasteners 1/3 nailer width and install within 6 inches (150 mm) of each end. Meet requirements current Factory Mutual Loss Prevention Data Sheet 1-49.
   b. Thickness shall match substrate or insulation/hardboard height.
   c. Anchor existing woodwork that is to remain so as to resist minimum force of 300 lbs (136 kg) per lineal foot (300 mm) in any direction. Reuse only woodwork designated to be reused in detail drawings.

3.3 INSTALLATION

A. General:
1. Roof surfaces shall be free of water, ice and snow. Surfaces to receive new insulation, membrane, or flashings shall be dry. Should surface moisture occur, provide equipment necessary to dry surface before application.
2. Secure new and temporary construction, including equipment and accessories, so as to preclude wind blow-off and subsequent roof or equipment damage.
3. Install only as much roofing as can be made weathertight each day, including flashing and detail work. Clean seams and heat-weld before leaving jobsite.
4. Schedule and execute work without exposing interior building areas to effects of inclement weather. Protect existing building and its contents against all risks.
5. Install uninterrupted waterstops at end of each day's work and completely remove before proceeding with next day's work. Waterstops shall not emit dangerous or unsafe fumes and shall not remain in contact with finished roof as installation progresses. Replace contaminated membrane at no additional cost to Owner.
6. Avoid use of newly constructed roofing as walking surface or for equipment movement and storage. Where such access is required, provide necessary protection and barriers to segregate work area and to prevent damage to adjacent areas. Provide protection layer consisting of plywood over insulation board and roofing membrane for new and existing roof areas that receive rooftop traffic during construction.
7. Before and during application, remove dirt, debris, and dust from surfaces either by vacuuming, sweeping, blowing with compressed air, or similar methods.
8. Report rooftop contamination that is anticipated or that is occurring to Roofing Manufacturer to determine corrective steps to be taken.

B. Insulation:
   1. Position first layer of insulation board over existing roof system with tight joints and staggered edges.
   2. Lay out tapered board to provide positive flow to roof drains as shown on Contract Drawings.
   3. Moisture content of insulation shall not exceed 4 percent.
   4. Over polyisocyanurate insulation, install recovery/hard board. Mechanically attach board to deck as directed by Roofing Membrane Manufacturer.

C. Membrane:
   1. Inspect surface of insulation or substrate before installation of roof membrane. Substrate shall be clean, dry and smooth with no excessive surface roughness, contaminated surfaces or unsound surfaces such as broken, delaminated, or damaged insulation boards.
   2. 'Mechanically Attached':
      a. In Seam Option:
         1) Unroll and position membrane without stretching. Provide and secure both perimeter and field membrane sheets in accordance with manufacturer's most current specifications and details.
         2) Secure membrane with required fasteners and plates spaced maximum of 12 inches (305 mm) on center depending or project conditions (centered over pre-printed marks approximately 1-1/2 inches (38 mm) from edge of membrane sheet).
         3) Install adjoining membrane sheets in same manner in accordance with manufacturer's specifications.
      b. Rhinobond Option:
         1) Preparation: Using test strip of membrane and loose Rhinobond plates, provide at least four (4) varied heat settings to calibrate Rhinobond welder for operation during each work period.
         2) Roll out and set membrane. Follow Manufacturer’s written instructions:
            a) Provide 3 inches (75 mm) shingled lap seaming area in all membrane overlaps.
            b) Weld random perimeter Rhinobond plates to secure field membrane from shifting during seam and field welds.
            c) Identify remaining Rhinobond plates and weld membrane using repeated leap frog method of welding followed by placement of cooling magnets.
   3. Hot-Air Welding Of Lap Areas:
      a. General:
         1) Seams shall be hot air welded. Seam overlaps shall be 3 inches (75 mm) wide minimum when automatic machine welding, and 4 inches (100 mm) wide when hand welding.
         2) Membrane to be welded shall be clean and dry. No adhesive shall be in seam.
      b. Hand Welding:
         1) Hand welded seams shall be completed in three stages. Allow hot-air welding equipment to warm up for one minute minimum before welding.
         2) Seam shall be tack-welded every 36 inches (900 mm) to hold membrane in place.
         3) Weld back edge of seam with narrow but continuous weld to prevent loss of hot air during final welding.
         4) Insert nozzle into seam at 45-degree angle. Once proper welding temperature has been reached and membrane begins to 'flow', position hand roller perpendicular to nozzle and press lightly. For straight seams, use 1-1/2 inch (38 mm) wide nozzle. Use 3/4 inch (19 mm) wide nozzle for corners and compound connections.
      c. Machine Welding: Follow Roofing Manufacturer's instructions and use recommended equipment.
      d. Quality Control of Welded Seams: Check welded seams for continuity using rounded screwdriver. Make on-site evaluation of welded seams daily at locations directed by Owner's Representative or representative of Roofing Manufacturer. Take one inch (25 mm) wide cross-section samples of welded seams at least three times a day. Patch each test cut at no additional cost to Owner.

D. Walkway Pads:

1. Install walkways at traffic concentration points (such as roof hatches, access doors, and rooftop HVAC equipment.) and locations as identified on Contract Documents. Provide any required supplemental attachment to new roof assembly to meet wind requirements.

E. Flashings:
1. General:
   a. Install flashings concurrently with roof membrane as job progresses. No temporary flashings shall be allowed without prior written approval of Owner's Representative and Roofing Manufacturer. Approval shall only be for specific locations on specific dates.
   b. If water is allowed to enter under newly completed roofing, remove and replace affected area no additional cost to Owner.
   c. Adhere flashings to compatible, dry, smooth, and solvent-resistant surfaces.
2. Membrane Flashings:
   a. Adhesive Application for Flashings:
      1) Apply adhesive using solvent-resistant 3/4 inch (19 mm) nap paint rollers. Apply adhesive in smooth, even coatings with no holidays, globs, or similar irregularities. Coat only area that can be completely covered in same day's operations. Allow surface with adhesive coating to dry completely prior to installing flashing membrane.
      2) When surface is dry, cut flashing membrane to workable length and evenly coat underside with adhesive at rate of 1/2 gal per 100 sq ft (2 liters per 9 sq meters). When adhesive has dried sufficiently to produce strings when touched with a dry finger, roll coated membrane onto previously coated substrate being careful to avoid wrinkles. Do not allow adhesive on underside of membrane to completely dry. Overlap adjacent sheets 3 inches (75 mm). Flashings shall extend 4 inches (100 mm) onto roofing membrane. Press bonded sheet firmly in place with hand roller.
      3) Apply no adhesive in seam areas that are to be welded.
   b. Install fasteners 12 inches (300 mm) on center with acceptable fasteners into structural deck at the base of parapets, walls, and curbs.
   c. Extend flashings 8 inches (200 mm) minimum above roofing level unless otherwise accepted in writing by Owner's representative and Roofing Manufacturer.
   d. Adhere flashing membranes to solvent resistant substrates. Cut interior and exterior corners and miters and hot-air weld into place. No bitumen shall be in contact with membrane.
   e. Mechanically fasten flashing membranes along top edge through tin discs or pre-drilled, galvanized metal strip washers spaced at of 12 inches (300 mm) maximum on center.
   f. Terminate flashings according to Roofing Manufacturer's recommended details.
3. Metal Flashings:
   a. Complete metal work in conjunction with roofing and flashings so that watertight condition exists daily.
   b. Install metal to provide adequate resistance to bending and allow for normal thermal expansion and contraction.
   c. Metal joints shall be watertight.
   d. Securely fasten metal flashings into solid wood blocking. Fasteners shall penetrate wood nailer one inch (25 mm) minimum.
   e. Counterflashings shall overlap base flashings 4 inches (100 mm) minimum.

F. Temporary Cut-Off:
1. Construct temporary waterstops to provide 100 percent watertight seal. Make stagger of insulation joints even by installing partial panels of insulation. Carry new membrane into waterstop. Seal waterstop to deck or substrate so water will not travel under new or existing roofing. Seal edge of membrane in continuous heavy application of sealant as described above. When work resumes, cut-out contaminated membrane and dispose of off-site.
2. If inclement weather occurs while temporary waterstop is in place, provide labor necessary to monitor situation to maintain watertight condition.
3. If water is allowed to enter under newly completed roofing, remove affected area and replace at no additional cost to Owner.

3.4 FIELD QUALITY CONTROL

A. Field Inspection:

1. Before Manufacturer's inspection for warranty, Installer must perform pre-inspection to review work and to verify flashing has been completed as well as application of caulking.
2. Final Roof Inspection:
   a. Arrange for Roofing Membrane Manufacturer's technical personnel to inspect roofing installation on completion.
3. Upon completion of roof inspection, provide certification that installation has been performed in accordance with Contract Document and Roofing Manufacturer requirements.

B. Non-Conforming Work:
1. Correct all work not in compliance to Contract Documents at no additional cost to Owner.
   a. Repair or remove and replace components of membrane roofing system where inspections indicate that they do not comply with specified requirements.
   b. Replace contaminated membrane.
2. Additional inspections will be performed to determine compliance of replaced or additional work with specified requirements at no additional cost to Owner.
3. Repair landscaped areas damaged by construction activities at no additional cost to Owner.

3.5 CLEANING

A. Waste Management:
1. Perform daily clean-up to collect wrappings, empty container, paper, and other roofing waste debris from project site.
2. Upon completion, roofing waste materials must be disposed from site to dumping area legally authorized to receive such materials.
3. Complete site cleanup, including both interior and exterior building areas that have been affected by construction, to Owner's satisfaction.

3.6 PROTECTION

A. Contractor Responsibility:
1. Protection of roofing membrane from damage and wear from other trades from damage after completion of roof membrane.
2. Clean overspray and spillage from adjacent construction using cleaning agents and procedures recommended by Manufacturer of affected construction.

END OF SECTION

SECTION 07 6210

GALVANIZED STEEL FLASHING AND TRIM

PART 1 - GENERAL

1.1 SUMMARY

A. Includes But Not Limited To:
   1. Furnish and install miscellaneous flashing, counterflashing, and hold-down clips as described in Contract Documents and not specified to be of other material.

B. Products Furnished But Not Installed Under This Section:
   1. Gravel stops, copings, scuppers, and miscellaneous sheet metal specialties not specified to be of other materials.

C. Related Requirements:
   1. Sections under 07 5423: 'Thermoplastic Polyolifin Roofing' for installation of gravel stops, copings, scuppers, and miscellaneous roofing related flashing.
   2. Section 07 9213: 'Elastomeric Joint Sealant'.

1.2 REFERENCES

A. Reference Standards:
   1. ASTM International:
      a. ASTM A653/A653M-13, ‘Standard Specification for Steel Sheet, Zinc-Coated (Galvanized) or Zinc-Iron Alloy-Coated (Galvannealed) by the Hot-Dip Process'.
      b. ASTM A792/A792M-10, ‘Standard Specification for Steel Sheet, 55 % Aluminum-Zinc Alloy-Coated by the Hot-Dip Process'.
   2. Federal Specifications:
      a. TT-S-00230C(2) Sealing Compound, Elastomeric Type, Single Component, (For Caulking, Sealing, and Glazing in Buildings and Other Structures).

PART 2 - PRODUCTS

2.1 SYSTEM

A. Manufacturers:
   1. Type Two Acceptable Manufacturers Of Metal:
      a. CMG – Coated Metals Group, Denver, CO www.cmgmetals.com.
      b. Drexel Metals, LLC, Ivyland, PA www.drexmet.com.
      c. Fabral, Lancaster, PA www.fabral.com.
      d. Firestone Metal Producdts, Anoka, MN www.unaclad.com.
      e. MBCI, Houston, TX www.mbci.com.
      f. Metal Sales Manufacturing Corp, Sellersburg, IN www.mtlsales.com.
      g. O’Neal Flat Rolled Metals (member of O'Neal Industries), Brighton, CO www.ofrmetals.com.
      h. Petersen Aluminum Corp, Elk Grove, IL www.pac-clad.com.
      i. Ryerson, Chicago, IL www.ryerson.com.
      j. Equal as approved by Architect before installation. See Section 01 6200.

B. Materials:
   1. Sheet Metal:

a. Galvanized iron or steel meeting requirements of ASTM A653/A653M, G 90 or Galvalume steel meeting requirements of ASTM A792/A792M AZ50, 50 ksi.
   1) 22 ga (0.792 mm) for hold-down clips.
   2) 24 ga (0.635 mm) for all other.

C. Fabrication:
   1. Form accurately to details.
   2. Profiles, bends, and intersections shall be even and true to line.
   3. Fold exposed edges 1/2 inch (12.7 mm) to provide stiffness.

D. Finish:
   1. Exposed to view:
      a. Provide face coating of polyvinyledene Fluoride (PVF_2) Resin-base finish (Kynar 500 or Hylar 5000) containing seventy (70) percent minimum PVF_2 in resin portion of formula. Thermo-cured two coat system consisting of corrosion inhibiting epoxy primer and top coat factory applied over properly pre-treated metal.
      b. Reverse side coating shall be thermo-cured system consisting of corrosion inhibiting epoxy primer applied over properly pre-treated metal.
   2. Color as selected by Architect from Manufacturer's standard colors.

2.2 ACCESSORIES

A. Sealants: Rubber base type conforming to Fed Spec TT-S-00230C.

B. Fasteners:
   1. Of strength and type consistent with function.
   2. Nails: Hot-dipped galvanized.
   3. Screws, Bolts, And Accessory Fasteners: Galvanized or other acceptable corrosion resistant treatment.

PART 3 - EXECUTION

3.1 INSTALLATION

A. Install with small, watertight seams.

B. Slope to provide positive drainage.

C. Provide sufficient hold down clips to insure true alignment and security against wind.

D. Provide 4 inch (100 mm) minimum overlap.

E. Allow sufficient tolerance for expansion and contraction.

F. Insulate work to prevent electrolytic action.

3.2 CLEANING

A. Leave metals clean and free of defects, stains, and damaged finish.

END OF SECTION

SECTION 07 9213

ELASTOMERIC JOINT SEALANTS

PART 1 - GENERAL

1.1 SUMMARY

A. Includes But Not Limited To:
   1. Furnish and install sealants not specified to be furnished and installed under other Sections.
   2. Quality of sealants to be used on Project not specified elsewhere, including submittal, material, and installation requirements.

B. Related Requirements:
   1. Removing existing sealants specified in Sections where work required.
   2. Furnishing and installing of sealants is specified in Sections specifying work to receive new sealants.

1.2 REFERENCES

A. Association Publications:
   1. American Architectural Manufacturers Association (AAMA):
      a. 'Voluntary Specifications and Test Methods for Sealants'.
   2. ASM International:
      a. 'Adhesives and Sealants', Volume 3, ASM International Handbook Committee, (May 1999).
      b. Committee C24 on Building Seals and Sealants for various Specifications, Guides, Test Methods, and Practices related to sealant specifying and application.
      c. Committee E6 on Building Performance for various Specifications, Guides, Test Methods, and Practices related to sealant use with air barriers, vapor retarders, and exterior enclosure systems and materials.
   3. The Adhesive and Sealing Council, Inc. (ASC) / Sealant, Waterproofing & Restoration Institute (SWR Institute):
      a. 'Sealants: The Professional's Guide'.
      b. 'Joint Sealants, Whole Building Design Guide'.

B. Definitions:
   1. Adhere: To cause two surfaces to be held together by adhesion.
   2. Adhesive: An adhesive, as defined by The American Society for Testing and Materials (ASTM), is 'a substance capable of holding materials together by surface attachment'.
   3. Caulk: Caulks have variety of definitions but are generally recognized as materials used in applications where only minor elastomeric properties are needed.
   4. Elastomer: Rubbery material which returns to approximately its original dimensions in short time after relatively large amount of deformation.
   5. Flow: Movement of adhesive during bonding process before adhesive is set.
   6. Joint: Location at which two substrates are held together with layer of adhesive.
   7. Primer: Coating applied to surface, prior to application of an adhesive, to improve performance of the bond.
   8. Sealant. Sealants are generally used in applications where elastic properties are needed while adhesives are generally used in applications where bonding strength and rigidity are needed. With technology advancements both sealants and adhesives can be used interchangeably depending on applications performance requirements.
   9. Sealant Types and Classifications:
      a. ASTM Specifications:
         1) Type:
            a) Type S: Single-component sealant.

b) Type M: Multi-component sealant.

2) Grade:
   a) Grade P: Pourable or self-leveling sealant used for horizontal traffic joints.
   b) Grade NS: Non-sag or gunnable sealant used for vertical and non-traffic joints.

3) Classes: Represent movement capability in percent of joint width.
   a) Class 100/50: Sealant that, when tested for adhesion or cohesion under cyclic movement shall withstand of at least 100 percent increase and decrease of at least 50 percent of joint width as measured at time of application.
   b) Class 50: Sealant that, when tested for adhesion or cohesion under cyclic movement shall withstand increase and decrease of at least 50 percent of joint width as measured at time of application.
   c) Class 25: Sealant that, when tested for adhesion or cohesion under cyclic movement shall withstand increase and decrease of at least 25 percent of joint width as measured at time of application.
   d) Class 12: Sealant that, when tested for adhesion and cohesion under cyclic movement shall withstand increase and decrease of at least 12 percent of joint width as measured at time of application.

4) Use:
   a) T (Traffic): Sealant designed for use in joints in pedestrian and vehicular traffic areas such as walkways, plazas, decks and parking garages.
   b) NT (Non-Traffic): Sealant designed for use in joints in non-traffic areas.
   c) I (Immersion): Sealant that meets bond requirements when tested by immersion (Immersion rated sealant applications require primer).
   d) M (Mortar): Sealant that meets bond requirements when tested on mortar specimens.
   e) G (Glass): Sealant that meets bond requirements when tested on glass specimens.
   f) A (Aluminum): Sealant that meets bond requirements when tested on aluminum specimens.
   g) O (Other): Sealant that meets bond requirements when tested on substrates other than standard substrates, being glass, aluminum, mortar.

b. Federal Specifications:

1) Type:
   a) Type I: Self-leveling, pour grade.
      (1) Compound which has sufficient flow to give smooth level surface when applied in horizontal joint at 40 deg F (4.4 deg C).
   b) Type II: Non-sag, gun grade
      (1) Compound which permits application in joints on vertical surfaces without sagging (slumping) at temperatures 40 deg F (4.4 deg C) and 122 deg. F (50 deg. C).
   c) Type NS: Non-sag, gun grade.
      (1) Non-sag shall be a compound which permits application in joints on vertical surfaces without sagging (slumping) at temperatures between -20 deg F and 122 deg. F (- 29 and 50 deg. C).

2) Class:
   a) Class A: Compounds resistant to 50 percent total joint movement (includes Type I and Type II).
      (1) Capable of resisting compression-extension cycling of plus and minus 25 percent of nominal half inch width.
   b) Class B: Compounds resistant to 25 percent total joint movement (includes Type I and Type II).
      (1) Capable of resisting compression-extension cycling of plus and minus12 1/2 percent of nominal half inch width.

10. Shelf Life: Period of time, usually beginning with date of manufacture, during which stored adhesive will remain effective or useful.
11. Silicone: Any member of family of polymeric products whose molecular backbone is made up of alternating silicon and oxygen atoms and which has pendant hydrocarbon groups attached to silicon atoms. Used primarily as a sealant. Offers excellent resistance to water and large variations in temperature (minus 100 deg F to + 600 deg F) (minus 73.3 deg C to + 316 deg C).
12. Stability: Ability of material to remain unchanged.

13. Storage Life: Period of time during which packaged adhesive can be stored under specified temperature conditions and remain suitable for use.
14. Substrate: Material upon surface of which an adhesive-containing substance is spread for any purpose, such as bonding or coating.
15. Surface Preparation: Physical and /or chemical preparation of substrate to render it suitable for adhesive joining. Same as substrate preparation or pre-bond preparation.
16. Toxicity: Material shall have no adverse effect on health of personnel when used for its intended purpose.

C. Reference Standards:
1. American Association of State and Highway Transportation Officials:
   a. AASHTO T 132-87(2013), ‘Standard Method of Test for Tensile Strength of Hydraulic Cement Mortars’.
2. ASTM International:
   a. ASTM C639-01(2011), 'Standard Test Method for Rheological (Flow) Properties of Elastomeric Sealants'.
   b. ASTM C661-06(2011), 'Standard Test Method for Indentation Hardness of Elastomeric-Type Sealants by Means of a Durometer'.
   c. ASTM C679-03(2009), ‘Standard Test Method for Tack-Free Time of Elastomeric Sealants’.
   d. ASTM C719-13, ‘Standard Test Method for Adhesion and Cohesion of Elastomeric Joint Sealants Under Cyclic Movement (Hockman Cycle)’.
   e. ASTM C793-05(2010), 'Standard Test Method for Effects of Laboratory Accelerated Weathering on Elastomeric Joint Sealants’.
   f. ASTM C794-10, 'Standard Test Method for Adhesion-in-Peel of Elastomeric Joint Sealants'.
   g. ASTM C920-14, ‘Standard Specification for Elastomeric Joint Sealants’.
   h. ASTM C1135-00(2011), 'Standard Test Method for Determining Tensile Adhesion Properties of Structural Sealants'.
   i. ASTM C1184-13, 'Standard Specification for Structural Silicone Sealants'.
   j. ASTM C1193-13, ‘Standard Guide for Use of Joint Sealants’.
   k. ASTM C1248-08(2012), 'Standard Test Method for Staining of Porous Substrate by Joint Sealants'.
   l. ASTM C1330-02(2013), ‘Standard Specification for Cylindrical Sealant Backing for Use with Cold Liquid Applied Sealants’.
   m. ASTM C1481-12 'Standard Guide for Use of Joint Sealants with Exterior Insulation & Finish Systems (EIFS)'.
   n. ASTM D412-06(2013), ‘Standard Test Methods for Vulcanized Rubber and Thermoplastic Elastomers-Tension’.
   o. ASTM D2202-00(2010), 'Standard Test Method for Slump of Sealants'.
   p. ASTM D2240-05(2010), ‘Standard Test Method for Rubber Property-Durometer Hardness’.
   q. ASTM D5893-10, ‘Standard Specification for Cold Applied, Single Component, Chemically Curing Silicone Joint Sealant for Portland Cement Concrete Pavements’.
   r. ASTM E119-12a, ‘Standard Test Methods for Fire Tests of Building Construction and Materials’.
3. Federal Specifications:
   a. Federal Specification TT-S-001543A (CON-NBS), 'Sealing Compound: Silicone Rubber Base (for Calking, Sealing & Glazing in Buildings and Other Structures)' (9 Jun 1971).
   b. TT-S-00230C (CON-NBS), ‘Sealing compound: Elastomeric Type, Single Component (For Calking, Sealing, And Glazing In Buildings And Other Structures.’ (2 Feb 1970).
4. Government Services Administration (GSA), Commercial Item Descriptions (CID):
   a. GSA CID A-A-272A, ‘Sealing Compound: Silicone Rubber Base (For Caulking, Sealing, and Glazing in Buildings and Other Structures)’.
   b. GSA CID A-A-1556, ‘Sealing Compound Elastomeric Type, Single Component (For Caulking, Sealing, and Glazing in Buildings and Other Structures)’.

1.3 ADMINISTRATIVE REQUIREMENTS

A. Scheduling:
1. Schedule work so waterproofing, water repellents and preservative finishes are installed after sealants, unless sealant manufacturer approves otherwise in writing.

2. Ensure sealants are cured before covering with other materials.

1.4 SUBMITTALS

A. Action Submittals:
   1. Product Data:
      a. Manufacturer's specifications and other data needed to prove compliance with the specified requirements.
      b. Manufacturer's literature for each Product.
      c. Schedule showing joints requiring sealants. Show also backing and primer to be used.

B. Informational Submittals:
   1. Certificates:
      a. Manufacturer's Certificate:
         1) Certify products are suitable for intended use and products meet or exceed specified requirements.
         2) Certificate from Manufacturer indicating date of manufacture.
   2. Manufacturers' Instructions:
      a. Manufacturer's installation recommendations for each Product.
      b. Manufacturer's installation for completing sealant intersections when different materials are joined.
      c. Manufacturer's installation for removing existing sealants and preparing joints for new sealant.

1.5 QUALITY ASSURANCE

A. Qualifications:
   1. Manufacturer: Company specializing in manufacturing products specified in this section with minimum ten (10) years documented experience.
   2. Applicator Qualifications:
      a. Company specializing in performing work of this section.
      b. Provide if requested, reference of projects with minimum three (3) years documented experience, minimum three (3) successfully completed projects of similar scope and complexity, and approved by manufacturer.
      c. Designate one (1) individual as project foreman who shall be on site at all times during installation.

B. Preconstruction Testing:
   1. Pre-construction testing is not required when sealant manufacturer can furnish data acceptable to Architect based on previous testing for materials matching those of the Work.

C. Mockups:
   1. Provide mockups including sealant and joint accessories to illustrate installation quality and color if requested by Architect or Project Manager.
      a. Incorporate accepted mockup as part of Work.

1.6 DELIVERY, STORAGE, AND HANDLING

A. Delivery and Acceptance Requirements:
   1. Deliver and keep in original containers until ready for use.
   2. Inspect for damage or deteriorated materials.

B. Storage and Handling Requirements:
   1. Handle, store, and apply materials in compliance with applicable regulations and material safety data sheets (MSDS).
   2. Handle to prevent inclusion of foreign matter, damage by water, or breakage.

3. Store in a cool dry location, but never under 40 deg F (4 deg C) or subjected to sustained temperatures exceeding 90 deg F (32 deg C) or as per Manufacturer's written recommendations.
4. Do use sealants that have exceeded shelf life of product.

1.7 FIELD CONDITIONS

A. Ambient Conditions:
1. Do not install sealant during inclement weather or when such conditions are expected. Allow wet surfaces to dry.
2. Follow Manufacturer's temperature recommendations for installing sealants.

1.8 WARRANTY

A. Manufacturer Warranty:
1. Signed warranties against adhesive and cohesive failure of sealant and against infiltration of water and air through sealed joint for period of three (3) years from date of Substantial Completion.
   a. Manufacturer's standard warranty covering sealant materials.
   b. Applicator's standard warranty covering workmanship.

PART 2 - PRODUCTS

2.1 SYSTEMS

A. Manufacturers:
1. Manufacturer Contact List:
   a. Dow Corning Corp., Midland, MI www.dowcorning.com.
   b. Franklin International, Inc. Columbus, OH www.titebond.com.
   c. GE Sealants & Adhesives (see Momentive Performance Materials Inc.).
   d. Laticrete International Inc., Bethany, CT www.laticrete.com.
   e. Momentive Performance Materials Inc. (formally GE Sealants & Adhesives), Huntersville, NC www.ge.com/silicones.
   f. Sherwin-Williams, Cleveland, OH www.sherwin-williams.com.
   g. Sika Corporation, Lyndhurst, NJ www.sikaconstruction.com or Sika Canada Inc, Pointe Claire, QC www.sika.ca.
   h. Tremco, Beachwood, OH www.tremcosealants.com or Tremco Ltd, Toronto, ON (800) 363-3213.

B. Materials:
1. Design Criteria:
   a. Compliance: Meet or exceed requirements of these standards:
      1) ASTM C920: Elastomeric joint sealant performance standard.
      2) ASTM C639 or ASTM D2202: Flow (sag or slump).
      3) ASTM C661 or ASTM D2240: Durometer hardness (shore A).
      4) ASTM C679 or ASTM C794: Tack free time (peel strength).
      5) ASTM C719: Joint movement capability.
      6) ASTM 793: Effects of accelerated weathering.
      7) ASTM C1135 or ASTM D412: Tensile adhesion strength.
      8) ASTM C1184: Structural silicone sealants.
      9) ASTM C1248: Staining.
      10) ASTM D412: Modulus.
      11) ASTM D5893: Silicone Joint Sealant for Concrete Pavements.
      12) Federal Specification TT-S-001543A.
      13) Federal Specification TT-S-00230C.
      14) GSA CID A-A-272A.

15) GSA CID A-A-1556.
b. Comply with Manufacturer's ambient condition requirements.
c. Sealants must meet Manufacturer's shelf-life requirements.
d. Sealants must adhere to and be compatible with specified substrates.
e. Sealants shall be stable when exposed to UV, joint movements, and particular environment prevailing at project location.
f. Primers (Concrete, stone, masonry, and other nonporous surfaces typically do not require a primer. Aluminum and other nonporous surfaces except glass require use of a primer. Installer Option to use Adhesion Test to determine if primer is required or use primer called out in related sections):
1) Adhesion Test:
a) Apply silicone sealant to small area and perform adhesion test to determine if primer is required to achieve adequate adhesion. If necessary, apply primer at rate and in accordance with Manufacturer's instructions. See 'Field Quality Control' in Part 3 of this specification for Adhesive Test.
2) If Primer required, shall not stain and shall be compatible with substrates.
3) Allow primer to dry before applying sealant.

2. Sealants At Exterior Sheet Metal And Miscellaneous:
a. Description:
1) Weathersealing expansion, contraction, perimeter, and other movement joints which may include all or part of the following for project:
a) Flashings.
b) Gutters.
c) Penetrations in soffits and fascias.
d) Roof vents and flues.
e) Lightning protection componets.
b. Design Criteria:
1) Meet following standards for Sealant:
a) ASTM C920: Type S Grade NS, Class 25 (min) Use A.
c. Category Four Approved Products. See Section 01 6200 for definitions of Categories:
1) Dow Corning: 790 Silicone Building Sealant.
2) Momentive Performance Materials (formerly, GE Sealants & Adhesives): GE SCS2350 Silicone Elastomeric Sealant.
3) Tremco: Tremsil 600 Silicone Sealant.

ACCESSORIES

C. Bond Breaker Tape:
1. Pressure sensitive tape as by Sealant Manufacturer to suit application.
2. Provide tape to prevent adhesion to joint fillers or joint surfaces at back of joint and allow sealant movement.

D. Joint Backing:
1. Comply with ASTM C1330.
2. Flexible closed cell, non-gassing polyurethane or polyolefin rod or bond breaker tape as recommended by Sealant Manufacturer for joints being sealed.
3. Oversized 25 to 50 percent larger than joint width.

E. Joint Cleaner:
1. Non-corrosive and non-staining type as recommended by Sealant Manufacturer, compatible with joint forming materials.

F. Masking Tape:
1. Non-staining, non-absorbent tape product compatible with joint sealants and adjacent joint surfaces.

PART 3 - EXECUTION

3.1 EXAMINATION

A. Verification Of Conditions:
   1. Examine substrate surfaces and joint openings are ready to receive Work.
      a. Verify each sealant is compatible for use with joint substrates.
      b. Verify joint surfaces are clean and dry.
      c. Ensure concrete surfaces are fully cured.
   2. Sealants provided shall meet Manufacturer's shelf-life requirements.
   3. Notify Architect of unsuitable conditions in writing.
      a. Do not proceed until unsatisfactory conditions are corrected.
   4. Commencement of Work by installer is considered acceptance of substrate.

3.2 PREPARATION

A. Surface Preparation:
   1. Remove existing joint sealant materials where specified.
      a. Clean joint surfaces of residual sealant and other contaminates capable of affecting sealant bond to joint surface using manufacturer's recommended joint preparation methods.
      b. Repair deteriorated or damaged substrates as recommended by Sealant Manufacturer to provide suitable substrate. Allow patching materials to cure.
   2. Surfaces shall be clean, dry, free of dust, oil, grease, dew, or frost. Prepare substrates in accordance with Manufacturer's instructions:
      a. Porous surfaces: Abrasive-clean followed by blasting with oil-free compressed air.
      b. Nonporous surfaces: Use two-cloth solvent wipe in accordance with ASTM C1193.
      c. High-pressure water cleaning: Exercise care that water does not enter through failed joints.
   3. Field test joints in inconspicuous location.
      a. Verify joint preparation and primer required to obtain optimum adhesion of sealants to joint substrate.
      b. When test indicates sealant adhesion failure, modify joint preparation primer, or both and retest until joint passes sealant adhesion test.
   4. Masking: Apply masking tape as required to protect adjacent surfaces and to ensure straight bead line and facilitate cleaning.

B. Joints:
   1. Prepare joints in accordance with ASTM C1193.
      a. Clean joint surfaces of contaminates capable of affecting sealant bond to joint surface using Manufacturer's recommended instructions for joint preparation methods.
      b. Remove dirt, dust, oils, wax, paints, and contamination capable of affecting primer and sealant bond.
      c. Clean concrete joint surfaces to remove curing agents and form release agents.

C. Protection:
   1. Protect elements surrounding the Work of this section from damage or disfiguration.

3.3 APPLICATION

A. General:
   1. Apply silicone sealant in accordance with Manufacturer's instructions.
   2. Do not use damaged or deteriorated materials.
   3. Install primer and sealants in accordance with ASTM C1193 and Manufacturer's instructions.
   4. Apply primer where required for sealant adhesion.
   5. Install sealants immediately after joint preparation.
   6. Do not use silicone sealant as per the following:
      a. Apply caulking/sealant at temperatures below 40 deg F (4 deg C).

b. Below-grade applications.
c. Brass and copper surfaces.
d. Materials bleeding oils, plasticizers, and solvents.
e. Structural glazing and adhesive.
f. Surfaces to be immersed in water for prolonged time.

B. Joint Backing:
1. Install joint backing to maintain sealant joint ratios recommended by Manufacturer.
2. Install without gaps, twisting, stretching, or puncturing backing material. Use gage to ensure uniform depth to achieve correct profile, coverage, and performance.
3. Rod for open joints shall be at least 1-1/2 times width of open joint and of thickness to give solid backing. Backing shall fill up joint so depth of sealant bite is no more than 3/8 inch (9.5 mm) deep.

C. Bond Breaker:
1. Install bond breaker where joint backing is not used or where backing is not feasible.
a. Apply bond-breaker tape in shallow joints as recommended by Sealant Manufacturer.

D. Sealant:
1. Apply sealant with hand-caulking gun with nozzle of proper size to fit joints. Use sufficient pressure to insure full contact to both sides of joint to full depth of joint. Apply sealants in vertical joints from bottom to top.
2. Fill joint opening to full and proper configuration.
3. Apply in continuous operation.
4. Tool joints immediately after application of sealant if required to achieve full bedding to substrate or to achieve smooth sealant surface. Tool joints in opposite direction from application direction, i.e., in vertical joints, from the top down. Do not 'wet tool' sealants.
5. Depth of sealant bite shall be 1/4 inch (6 mm) minimum and 1/2 inch (12.7 mm) maximum, but never more than one half or less than one fourth joint width.

E. Caulk gaps between painted or coated substrates and unfinished or pre-finished substrates. Caulk gaps larger than 3/16 inch (5 mm) between painted or coated substrates.

3.4 TOLERANCES

A. Provide joint tolerances in accordance with Manufacturer's printed instructions.

3.5 FIELD QUALITY CONTROL

A. Adhesion Test (Installer Option to use adhesion test to determine if primer is required).
1. Perform adhesion tests in accordance with Manufacturer's instructions and ASTM C1193, Method A, Field-Applied Sealant joint Hand-Pull Tab:
a. Perform five (5) tests for first 1,000 linear feet (300 meters) of applied silicone sealant and one (1) test for each 1,000 linear feet (300 meters) seal thereafter or perform one (1) test per floor per building elevation minimum.
b. For sealants applied between dissimilar materials, test both sides of joints.
2. Sealants failing adhesion test shall be removed, substrates cleaned, sealants re-installed, and re-testing performed.
3. Maintain test log and submit report to Architect indicating tests, locations, dates, results, and remedial actions.

3.6 CLEANING

A. Remove masking tape and excess sealant.

B. Clean adjacent materials, which have been soiled, immediately (before setting) as recommended by Manufacturer.

C. Waste Management: Dispose of products in accordance with manufacturer's recommendation.

END OF SECTION

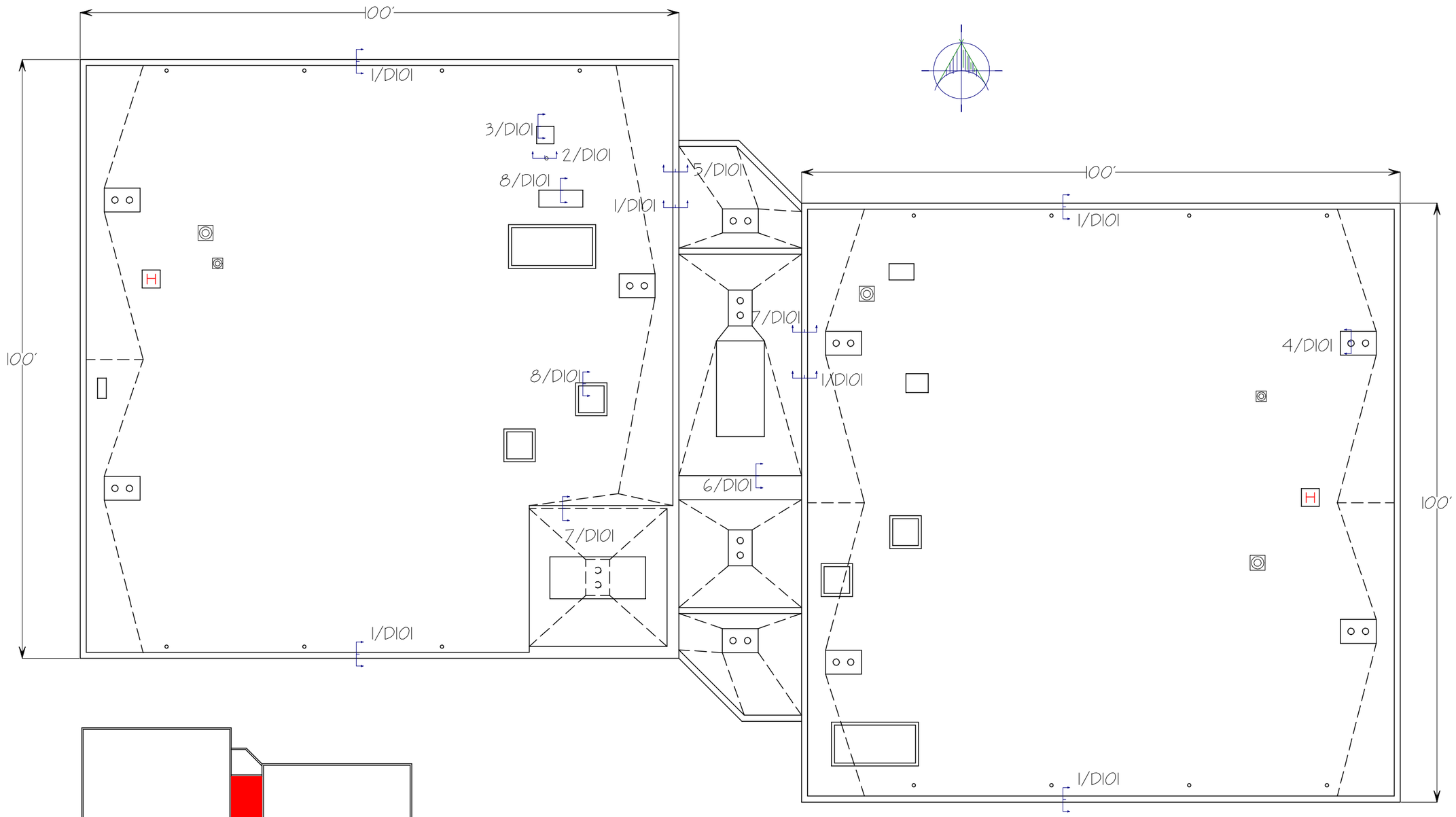

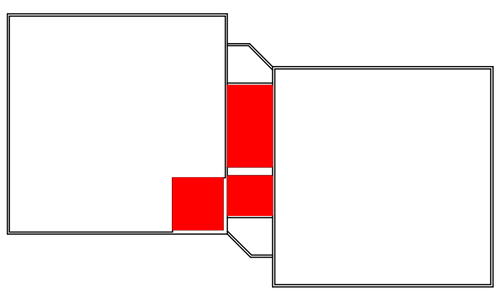

LEGEND

GENERAL NOTES:

1. CONTRACTOR TO FIELD VERIFY DIMENSIONS
2. NOT ALL PENETRATIONS ARE SHOW - FIELD VERIFY
3. DETAILS ARE TYPICAL FOR EACH CONDITION ENCOUNTERED
4. AREAS INDICATED IN RED ON LEGEND THE ENTIRE ROOFING & INSULATION TO BE REMOVED TO THE DECK
5. ALL OTHER AREAS ONLY THE ROOF MEMBRANE TO BE REMOVED
6. WALK PADS TO BE INSTALLED AT ALL ROOF HATCHES, DOORWAYS & MECHANICAL EQUIPMENT

Architect / Engineer:

JGR SERVICES

BUILDING ENVELOPE CONSULTANTS

95 E FORT UNION BLVD MIDVALE, UT 84047
801.748.1764
HTTP://WWW.JGRSERVICES.COM

Stamp:

Project Name
UT COUNTY
ADMINISTRATION BLDG

Project for:

Utah County
HEART OF UTAH

Mark	Date	Description

Project Number:

Plan Series:
N/A

25 MAY 2016

Sheet Title:
ROOF PLAN

Sheet:
A101

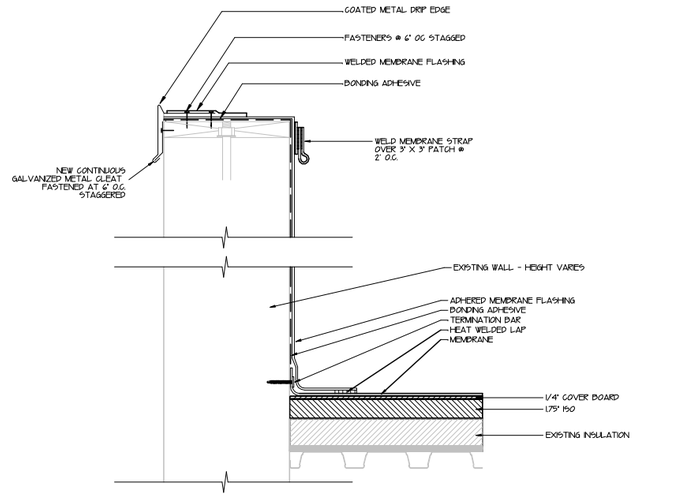

DETAIL 1

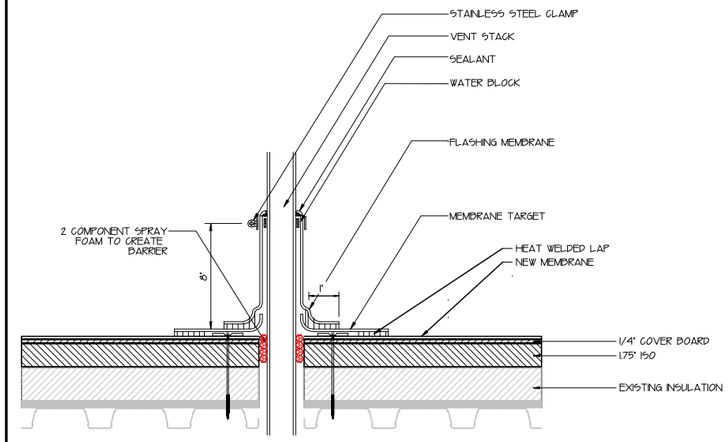

DETAIL 2

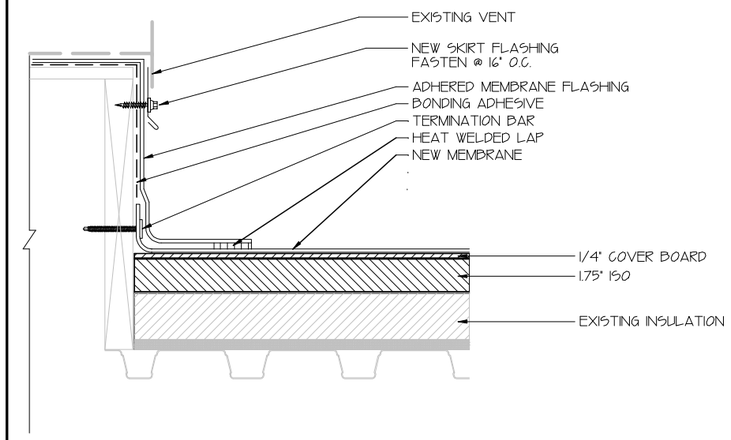

DETAIL 3

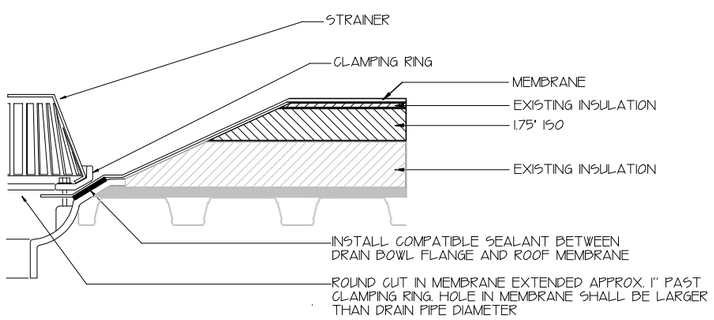

DETAIL 4

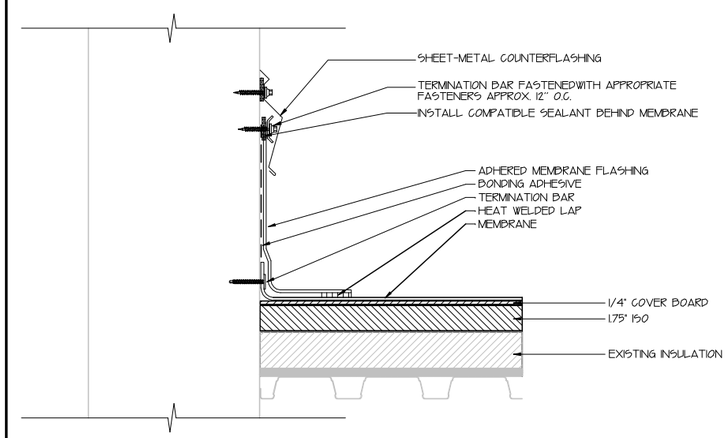

DETAIL 5

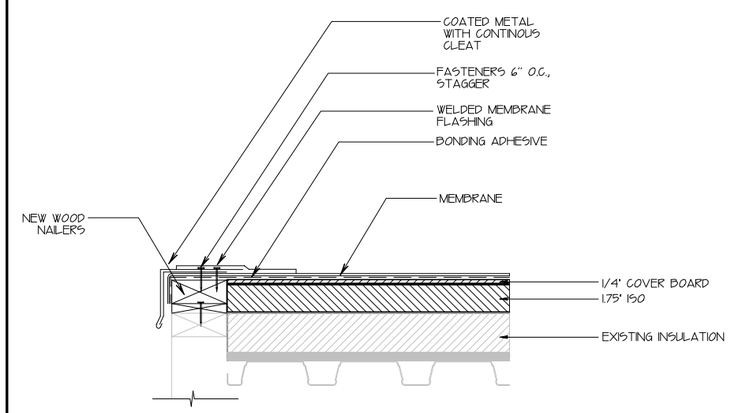

DETAIL 6

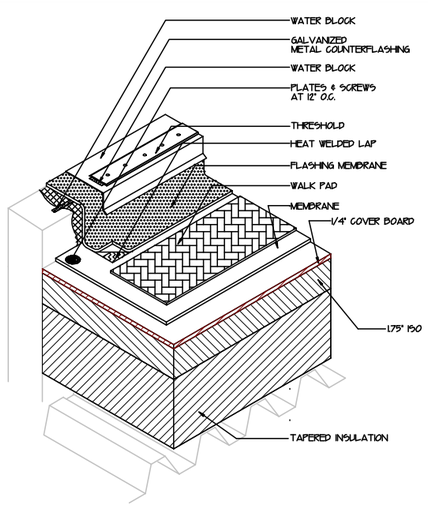

DETAIL 7

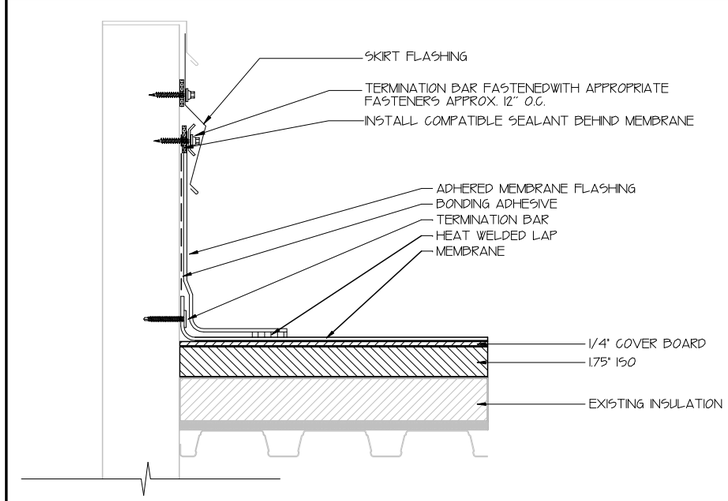

DETAIL 8

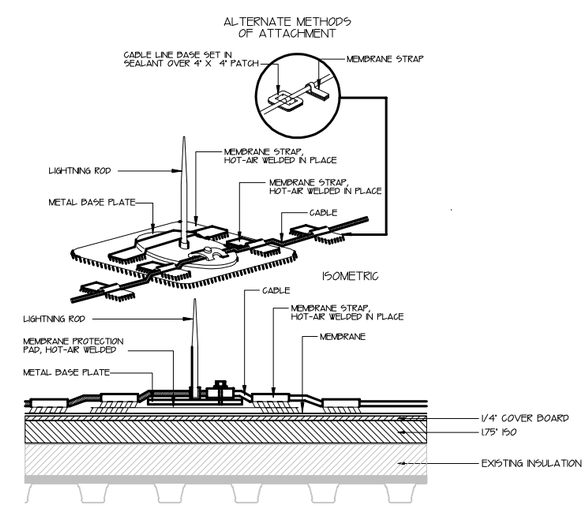

DETAIL 9

Architect / Engineer:

BUILDING ENVELOPE CONSULTANTS
95 E FORT UNION BLVD MIDVALE, UT 84047
801.748.1766
HTTP://WWW.JGRSERVICES.COM

Stamp:

Project Name
UT COUNTY ADMINISTRATION BLDG

Project for:
Utah County

Mark	Date	Description

Project Number:

Plan Series:
N/A
25 MAY 2016

Sheet Title:
ROOF DETAILS

Sheet:
D101

EXHIBIT B

CONTRACTOR'S COST PROPOSAL

1. LUMP SUM BID:

ITEM	TOTAL COST
Administration Building Roof Replacement	$_____

2. CERTIFICATION OF BID:

I hereby certify that I have read, understand, and agree to all sections, Exhibits, and Attachments of this Invitation to Bid for Administration Building Roof Replacement. I further certify that the information submitted by me/my company in response to this Invitation, including the pricing and other information, is true and accurate.

I understand that Utah County has the right to reject any or all bids, to waive minor irregularities when to do so would be in the best interests of Utah County, and to negotiate a price for the proposed services as determined to be in the best interest of Utah County.

_____
Signature

_____
Print name and Title

ATTACHMENT A

CONTRACTOR INFORMATION FORM

In order to receive consideration, submitted bids must contain responses to all questions.
Failure to respond to all questions may result in disqualification of the bid.

COMPANY NAME & ADDRESS: _____
_____
_____

Is this an Office:_____, Home:_____, Shop:_____, Other:_____
Telephone Number: (____) _____, Emergency Number: (____) _____.
Answering Machine: (____) _____, Fax Number: (____) _____ .
Email Address: _____

COMPANY OWNER: _____
COMPANY PRESIDENT: _____
CONTACT PERSON: _____ Phone:_____

Type of Company (Partnership, Corporation, Venture etc.): _____
_____
If a Corporation, in what State Incorporated: _____
Business License Number: _____
State of Utah Contractor License Number: _____
Federal Tax Identification Number: _____
D&B D-U-N-S Number: _____
How long has this company been in business: _____Years, and _____ Months.

Officers authorized to execute contracts: _____
_____
_____
What would happen to your company in the event of the owner's absence or death?
_____

Brief History of the Company: _____
_____
_____
_____

	YES	**NO**
Are there any judgments, suits or claims pending against your company? If Yes, attach a written explanation.	☐	☐
Has your company operated under any other name (s)? If Yes, attach a written explanation.	☐	☐

	YES	NO
Has your firm failed to complete a contract within the last five years? If "yes" attach explanation.	☐	☐
Has your firm or any partner or officers ever been involved in any bankruptcy action? If "yes" attach explanation.	☐	☐
Has your firm ever been listed on the Excluded Parties List System?	☐	☐
Are any of your firm's owners, officers, employees, or agents also employees of Utah County or related to any employees of Utah County If "yes" attach explanation.	☐	☐

FINANCIAL REFERENCES

1. Bank Name & Address _____

_____

_____

Manager _____ Phone _____

2. Bank Name & Address _____

_____

_____

Manager _____ Phone _____

CLIENT REFERENCES

1. Name: _____, Contact: _____

Address: _____, Phone: _____

_____

_____

2. Name: _____, Contact: _____

Address: _____, Phone: _____

_____

_____

3. Name: _____, Contact: _____

Address: _____, Phone: _____

_____

_____

4. Name: _____, Contact: _____

Address: _____, Phone: _____

_____

_____

ATTACHMENT B

CERTIFICATE OF NON-COLLUSION

STATE OF UTAH)
)SS
COUNTY OF UTAH)

Invitation to Bid
for
Administration Building Roof Replacement

AFFIDAVIT

The undersigned of lawful age, being first duly sworn, disposes and says:
That as a condition precedent to the award of the Utah County project as above captioned,

I_____
(owner, partner, officer or delegate)

of_____do
(company)
solemnly swear that neither I, nor to the best of my knowledge any member or members of my firm or company have either directly or indirectly restrained free and competitive bidding on this project by entering into any agreement, participating in any collusion, or otherwise taking any action unauthorized by Utah County, with regard to this bid or potential agreement resulting therefrom.

_____
Contractor Signature

By: _____
Title: _____

****

Subscribed/sworn to before me this ____ day of _____ 2016A.D.
My Commission Expires _____
Residing at _____
_____ Seal
_____

By:_____
Notary Public

ATTACHMENT C

AGREEMENT

AGREEMENT NO. 2016-_____

AGREEMENT

THIS AGREEMENT is made and entered into this _____ day of August, 2016, by and between **UTAH COUNTY**, a body corporate and politic of the State of Utah, hereinafter referred to as the **COUNTY**, and **_____,** hereinafter referred to as **CONTRACTOR**.

WITNESSETH:

WHEREAS, COUNTY desires to obtain materials and services as herein defined and further to obtain such materials and services in accordance with Utah State Law; and

WHEREAS, CONTRACTOR is willing to provide such materials and services to COUNTY in consideration of receiving such fees as herein provided;

NOW, THEREFORE, in consideration of the mutual promises set forth herein, the parties hereto agree as follows:

1. DESCRIPTION OF WORK

In consideration of the compensation set forth in Section 2, the CONTRACTOR agrees to furnish all labor, materials, equipment, tools, transportation, and supplies required to complete the work as for COUNTY as set forth in the Specifications attached hereto as Exhibit A and the CONTRACTOR'S Cost Proposal attached hereto as Exhibit B, all of which are incorporated herein by this reference the same as if each and all had been set forth at length herein.

2. COMPENSATION

In exchange for services listed in Section 1, COUNTY will pay CONTRACTOR the applicable price stated in Exhibit B for items accepted by COUNTY which conforms to the Specifications in Exhibit A.

3. AMENDMENTS

No oral modifications or amendments to this Agreement shall be effective, but such may be modified or amended by a written agreement signed by the parties.

4. ALTERATION OF SPECIFICATIONS OR CHARACTER OF WORK

The County Commission, after recommendation by the County Public Works Director, reserves the right to make, at any time during the term of this Agreement, such increases

or decreases in quantities and such alterations in the details of the work, and the elimination of one or more items as may be found necessary or desirable and to adjust the contract price accordingly by change order. Such alterations shall not be considered as a waiver of nor release of any surety. CONTRACTOR agrees to accept the specifications as altered the same as if it had been a part of the original Agreement. CONTRACTOR shall proceed with the work alterations when ordered in writing. Financial increases to this Agreement must be approved by the County Commission before additional work is authorized and constructed.

5. ASSIGNMENT

The parties to this Agreement shall not assign said Agreement, or any part thereof, without the prior written consent of the other party to the Agreement. No assignment shall relieve the original parties from any liability hereunder.

6. AUTHORITY OF THE COUNTY COMMISSION AND THE COUNTY PUBLIC WORKS DIRECTOR

A. The County Commission and the County Public Works Director will decide all questions which may arise as to the quality, quantity and acceptability of materials furnished and work performed and as to the rate of progress of work. They will also decide all questions which may arise as to the acceptable fulfillment of the Agreement on the part of CONTRACTOR.

B. The County Commission or the County Public Works Director will have the authority by written order to suspend work wholly or in part due to the failure of CONTRACTOR to correct conditions unsafe for the workmen or general public, for failure to carry out provisions of the Agreement, for failure to carry out orders, for such periods as deemed necessary due to unsuitable weather, for conditions considered unsuitable for the progress of the work, or for any other condition or reason deemed to be in the public interest. Written orders shall state the reason for suspension.

7. EMPLOYMENT STATUS VERIFICATION

CONTRACTOR shall register and participate in the Status Verification System and comply with Utah Code Annotated Section 63G-11-103 of the Identity Documents and Verification Act. CONTRACTOR shall by contract require its contractors, subcontractors, contract employees, staffing agencies, or any contractors regardless of

their tier to register and participate in the Status Verification System and comply with Utah Code Annotated Section 63G-11-103 of the Identity Documents and Verification Act.

8. EXTRA WORK

Extra work shall be undertaken only when previously authorized in writing by Utah County and is defined as additional work which is neither shown nor defined in the Specifications. Miscellaneous items normally associated with the major work items shown, but which may not be specifically shown, shall be furnished by CONTRACTOR as if they had been shown, without additional cost to Utah County.

9. INDEMNIFICATION

CONTRACTOR shall defend, indemnify, save and hold harmless Utah County, its officers, employees, and agents, from and against any and all claims, demands, causes of action, orders, decrees, judgments, losses, damages, and liabilities (including all costs and attorney's fees incurred in defending any claim, demand, or cause of action) occasioned by, growing out of, or arising or resulting from (a) CONTRACTOR'S, its subcontractors, agents or employees performance of this Agreement or their provision of any services required herein to be performed by CONTRACTOR or its subcontractors, agents or employees, and (b) any act or omission of CONTRACTOR, or its subcontractors, agents or employees.

10. INDEPENDENT CONTRACTOR

A. CONTRACTOR states and affirms that it is acting as an independent contractor, holding itself out to the general public as an independent contractor for other work or contracts as it sees fit; that it advertises its services as it sees fit to the general public, maintains its office or place of employment separate from Utah County, and that this Agreement is not exclusive of other agreements, contracts or opportunities.

B. The parties intend that an independent contractor relationship will be created by this Agreement. Utah County is interested only in the results to be achieved, and the conduct and control of the work will lie solely with CONTRACTOR. CONTRACTOR is not to be considered an agent or employee of Utah County for any purpose, and the employees of CONTRACTOR are not entitled to any of the benefits that Utah County provides for County's employees. It is understood that

Utah County does not agree to use CONTRACTOR exclusively. It is further understood that CONTRACTOR is free to contract for similar services to be performed for others while working under the provisions of this Agreement with Utah County.

C. Both parties agree that CONTRACTOR shall be deemed an independent contractor in the performance of this Agreement, and shall comply with all laws regarding unemployment insurance, disability insurance, and workers' compensation. As such, CONTRACTOR shall have no authorization, express or implied, to bind Utah County to any agreement, settlement, liability, or understanding whatsoever, and agrees not to perform any acts as agent for Utah County. The compensation provided for herein shall be the total compensation payable hereunder by Utah County.

11. INSPECTION AND ACCEPTANCE

Utah County or its authorized representatives shall have the right to enter the premises of CONTRACTOR, or such other places where contract services are being performed, to inspect, audit, monitor or otherwise evaluate the services being provided and the financial records pertaining to the Agreement. CONTRACTOR must provide reasonable access to all facilities and assistance to Utah County or its authorized representatives.

12. INSURANCE

A. CONTRACTOR agrees to carry Commercial General Liability insurance coverage equal to or greater than $2,300,000 per occurrence or as modified by the risk manager pursuant to state statute during the term of this Agreement. This coverage shall provide liability insurance to cover the activities of CONTRACTOR including CONTRACTOR'S agents, employees and subcontractors, and for all equipment and vehicles, public or private, used in the performance of this Agreement. The successful bidder shall provide a Certificate of Insurance to Utah County evidencing that CONTRACTOR has this insurance in place and shall maintain said insurance for the duration of this Agreement.

B. CONTRACTOR shall furnish a Certificate of Insurance to COUNTY evidencing that CONTRACTOR has Workers Compensation Insurance for the CONTRACTOR, all subcontractors, and all employees of the CONTRACTOR and/or subcontractors.

13. INTERPRETATION OF AGREEMENT

The invalidity of any portion of this Agreement shall not prevent the remainder from being carried into effect. Whenever the context of any provision shall require it, the singular number shall be held to include the plural number, and vice versa, and the use of any gender shall include all genders. The paragraph and section headings in this Agreement are for convenience only and do not constitute a part of the provisions hereof.

14. KEYS

If it becomes necessary for the County to issue CONTRACTOR a key to County locks, final payment to CONTRACTOR will be held until the key has been returned and documented. It is illegal to duplicate County keys.

15. LEGAL

CONTRACTOR shall be responsible to provide all legal support for the project including but not limited to the preparation of contracts with subcontractors. This Agreement shall be interpreted pursuant to the laws of the State of Utah.

16. NO PRESUMPTION

Should any provision of this Agreement require judicial interpretation, the Court interpreting or construing the same shall not apply a presumption that the terms hereof shall be more strictly construed against a party, by reason of the rule of construction that a document is to be construed more strictly against the person who himself or through his agents prepared the same, it being acknowledged that all parties have participated in the preparation hereof.

17. NOTICES

All notices, demands and other communications required or permitted to be given hereunder shall be in writing and shall be deemed to have been properly given if delivered by hand or by certified mail, return receipt requested, postage paid, to the parties at their respective places of business, or at such other addresses as may be designated by notice given hereunder.

18. PAYMENTS

A. CONTRACTOR shall submit timely invoices for materials delivered to County. Upon verification of the validity of an invoice, County shall pay CONTRACTOR within 30 calendar day of receipt of the invoice.

B. Payment will be based upon verification of the actual quantities accepted by County which comply with these specifications.

C. Partial or progress payments shall not relieve CONTRACTOR of performance or obligations under this AGREEMENT, nor shall such payments be viewed as approval or acceptance of work performed.

D. The "Method of Measurement" and the "Basis of Payment" for all items shall be by the “Unit Price” specified by CONTRACTOR in the “Contractor’s Cost Proposal”.

19. SUCCESSORS IN INTEREST

This Agreement shall be binding upon the heirs, successors, administrators, and assigns of each of the parties thereto.

20. TERM

The term of this AGREEMENT shall commence upon execution hereof and shall terminate upon final payment by COUNTY as specified herein.

21. TERMINATION

A. The Agreement may be terminated for any reason by Utah County upon thirty (30) days written notice to CONTRACTOR, without prejudice to any other right or remedy Utah County may have.

B. Failure of CONTRACTOR to adhere to any of the performance requirements of the Agreement shall be cause for termination without prior notice.

C. The Agreement may be terminated for any reason by CONTRACTOR upon ninety (90) days written notice to Utah County.

22. WARRANTY

CONTRACTOR warrants to Utah County that all materials furnished under this Agreement will be new unless otherwise specified, and that all work will be of good quality, free from faults and defects and in conformance with this Agreement. All work and/or materials not conforming to these requirements, including substitutions not properly approved and authorized, may be considered defective. If required by Utah County, CONTRACTOR shall furnish satisfactory evidence as to the kind and quality of materials.

23. ENTIRE AGREEMENT

This Agreement shall constitute the entire agreement between the parties and any prior understanding or representation of any kind preceding the date of this agreement shall not be binding upon either party except to the extent incorporated in this Agreement.

IN WITNESS WHEREOF the parties have caused this AGREEMENT to be duly executed on the date set forth above.

BOARD OF COUNTY COMMISSIONERS
UTAH COUNTY, UTAH

_____
LARRY ELLERTSON, Chairman

ATTEST:
BRYAN E. THOMPSON
County Auditor/Clerk

By: _____
Deputy

APPROVED AS TO FORM:
JEFFREY R. BUHMAN
Utah County Attorney

By: _____
Deputy County Attorney

CONTRACTOR

_____
By: